Installation instructions

Door control TS 400

for sliding-door-drives ELEKTROMATEN®

Model: **51171531**

-en-

Status: g / 11.2017

0000000 0000 51171531 XXXXX

GfA ELEKTROMATEN GmbH & Co. KG
Wiesenstraße 81 40549 Düsseldorf
www.gfa-elektromaten.de
info@gfa-elektromaten.de

Table of contents

Table of contents 3
Basic directions 4
Explanation of warnings 5
Installation advice 6
Installation overview 7
TS400 basic Infomation 8
Hardware overview 9
Nomenclature 10
Functions 11
Description of connecting terminals 12-13
Connecting diagram X1-X3 DES - plugable 14
Connecting diagram X1-X3 NES - plugable 15
Connecting diagram X1-X3 NES - cabling of external switches 16
Connecting diagram X3 inductive end-switches 17
Connecting diagram X4-X5 18
Connecting diagram X6-X8 19
Connecting diagram X7-X8 20
Modules 21-22
Control programming 23-28
- Installation menu 24-26
- User menu 27-28

Status indications 29
Fault messages - reasons and fixing 30-31
Declaration of incorporation 32
Lifetime / Doorcycles 33
Technical specifications 34

Basic directions

This control has been built in accordance with EN12453 Industrial, commercial and garage doors and gates - Safety in use of power operated doors - Requirements and EN12978 Industrial, commercial and garage doors and gates - Safety devices for power operated doors - Requirements and Test methods; and left the factory in perfect condition from the point of view of safety. To maintain this condition and to ensure safe operation, the user must observe all the directions and warnings contained in these operating instructions. In principle, only trained electrical craftsmen should work on electrical equipment. They must assess the work which has been assigned to them, identify potential danger sources and take suitable safety precautions. Reconstruction of or changes to TS400 are only permissible with the approval of the manufacturer. Original replacement parts and accessories authorized by the manufacturer guarantee safety. Liability ceases to apply if other parts are used. The operational safety of a TS400 is only guaranteed if it is used in accordance with the regulations. The limiting values stated in the technical data should not be exceeded under any circumstances (see corresponding sections of the operating instructions).

Safety regulations

During the installation, initial operation, maintenance and testing of the Control Panel, it is necessary to observe the safety and accident-prevention regulations valid for the specific application.
In particular, you should observe the following regulations (this list is not exhaustive):

European normative
- EN 12445 Safety in use of power operated doors - Test methods
- EN 12453 Safety in use of power operated doors - Requirements
- EN 12978 Industrial, commercial and garage doors and gates -Safety devices for power operated doors - Requirements and Test methods

Please check engineer standards bellow.

VDE-regulations
- EN 418 Safety of machinery –
  Emergency stop equipment functional aspects and principles for design
- EN 60204-1 / VDE 0113-1 Safety of machinery –
  Electrical equipment of machines
  Part 1: general prescriptions
- EN 60335-1 / VDE 0700-1 Safety of household and similar electrical appliances
  Part 1: general requirements

Regulations
- Please ensure that the local regulations relating to the Safety of Operations of Doors are followed

Explanation of warnings

These operating instructions contain directions which are important for appropriate and safe use of ELEKTROMATEN®

The individual directions have the following meaning:

DANGER
This indicates danger to the life and health of the user if the appropriate precautions are not taken.

CAUTION
This warns that the ELEKTROMATEN® or other materials may be damaged if the appropriate precautions are not taken.

General warnings and safety precautions

The following warnings are to be understood as a general guideline for working with the ELEKTROMATEN® in conjunction with other devices. These directions must be observed strictly during installation and operation.

Check that all screw connections are secure before operating the control and adjusting the limit switches.

- Please observe the safety and accident prevention regulations valid for the specific application.
- The ELEKTROMATEN® must be installed with the authorised coverings and protective devices. Care should be taken that any seals are fitted correctly and screw couplings are tightened correctly.
- In the case of ELEKTROMATEN® with a permanent mains connection, an all-pole main switch with appropriate back-up fuse must be provided.
- Check live cables and conductors regularly for insulation faults or breakages. When a fault is detected in the cabling, the defective cabling should be replaced after immediately switching off the mains supply.
- Before starting operation, check whether the permissible mains voltage range of the devices corresponds to the local mains voltage.
- With three – phase motor connection it must have right phase rotation

Installation advice

After the ELEKTROMAT® is fitted we recommend the following procedure to rapidly reach full function of the control unit.

➢ **Enclosure Installation**
- Before mounting the enclosure, the surface has to be checked for flatness, slope and should be free from vibrations. Mounting must be vertical. It is important that the door can be clearly seen from the position of the control throughout its travel.

➢ **Connect the control and the ELEKTROMAT®**
- After the drive and control are fitted they can be connected with a plug-in cable. The cable has plugs on each end and for easy fitting. The plugs for motor and control panel are different and cannot be interchanged.

➢ **Main supply**

DANGER! To the life and health thru electric shock.
Before mounting the mains supply must be switched OFF.

External fuse!
Control must be saved against short circuit and overload by an external fuse, max. 10A delayed, in the mains supply. An automatic cut off switch is required, regarding the supply for three-phase or single-phase.

- When connecting control to main supply a mains isolator switch or (16A CEE – plug) according EN 12453 is required.

➢ **Adjust main settings**
- detect safety edge system
- detect limit switch system
- Adjust phase control
- **Check phase rotation** (if necessary change X1: L1 and L3) and adjust limits.

➢ **Install commands**
- Install all commands, in dead man mode the user shall be in full view of the door throughout its travel. These commands have to be installed at X5.

➢ **Install, activate and test all safety devices**
- Install safety devices, if necessary change settings and test any unit.

Installation overview

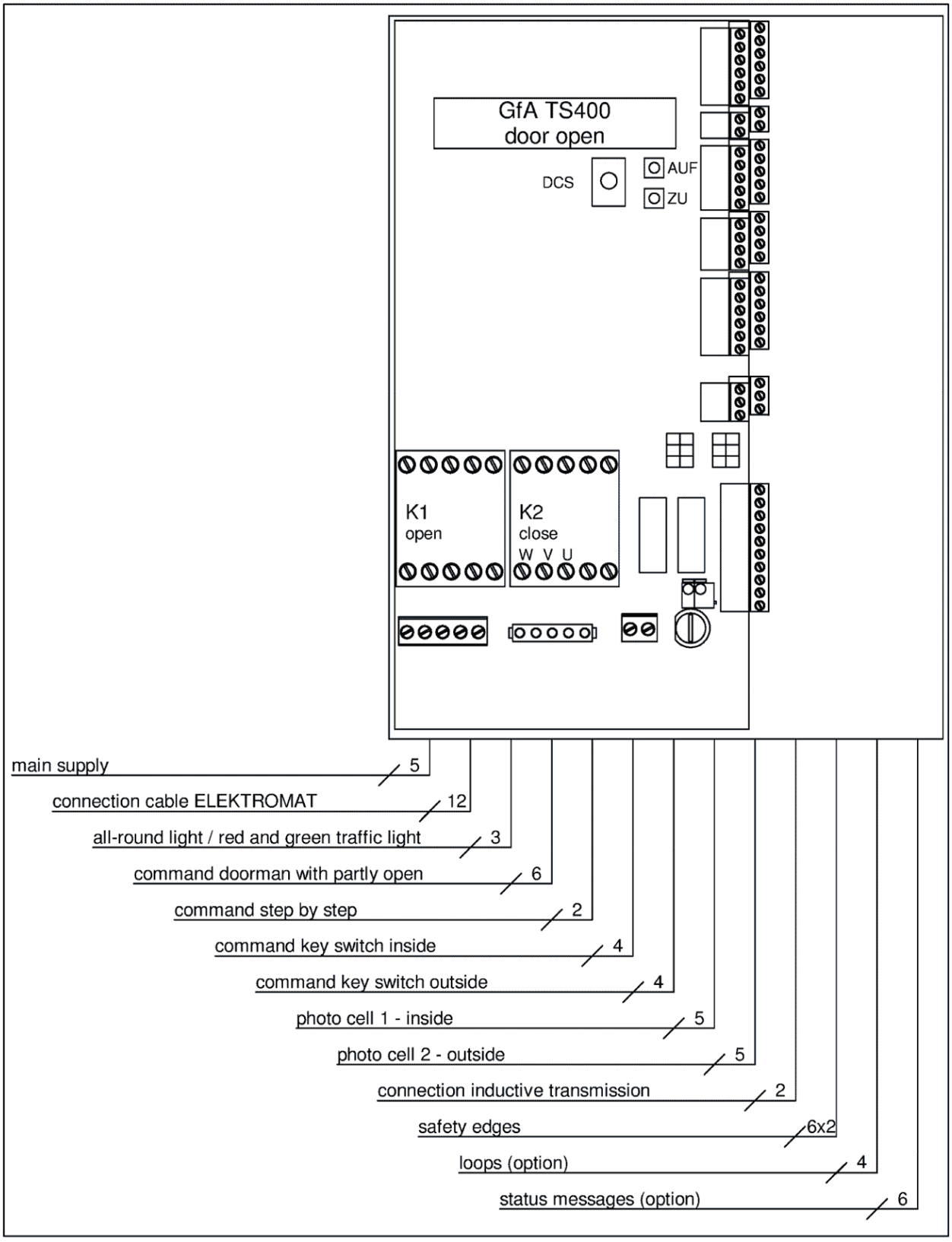

TS 400 basic information

- The control TS 400 is designed for use with GfA Sliding-door-drives ELEKTROMATEN® with / without Magnetic brake. It has to be installed separately and to be wired with the ELEKTROMATEN®. The main board contains contactors for open(K1) and close(K2). Additional modules e.g. for loop detection are available.

- The TS 400 is designed for 3-phase motors 3x400V/N/PE, 3x230V//N/PE or single phase a.c. motors 1x230V/N/PE with symmetric winding. Correct switching operation of the contactors is controlled through **phase-monitoring** of U/V/W while movement and also in standstill. While programming the control setting for phase-monitoring for single-phase or 3-phase has to be done. Also it is possible to turn the monitoring off in this menu.

- An **integrated power supply** for 24V/DC is for internal use and also for supply of external devices construed. Through this the control is impassibly against voltage fluctuation. All external commands and safety devices are connected to the 24V/DC control circuit. In case of overload the power supply turns off and resets after a few seconds.

- The travel way is determined through limit switches mounted inside the ELEKTROMATEN® or separate, at the sliding-door mounted (mechanic or inductive) limit switches. If internal limit switches in ELEKTROMATEN® are used these might be **mechanic (NES) or digital (DES).** For both pluggable cables can be used.

- The control is equipped with a 2-row 20-signs **LC-Display**. This is used for programming, information about door status and for clear information about fault status. The Encoder (DCS) and the display enable an easy guided adjustment of the control unit. After the first power-on the initialization may take up to 30 seconds.

- Next to the DCS two **switches** are mounted direct to the mainboard. These are marked with open (AUF) and close (ZU) and can be used for direct command during the adjustment of the limits. The switches also can be used in dead man mode, so the control has to be mounted in full view of the door.

- A **weekly timer** is also integrated in the control unit. The power supply for this clock timer is buffered by a battery for about 6 hours. After a longer breakdown date and time have to be adjusted. The programmed times (up to 33 cycles) are saved permanent. For use of the timer automatic closing has to be activated (Open time > 0).

- Up to **6 safety edges** with Resistor 8K2 are evaluated. Two moveable and four stationary safety edges can be connected. There are two possibilities for signal transmission of the moveable safety edges:
  - Wired with system of cable handling
  - Inductive transmission – ASO module necessary
    Attention: max. length of cable from control unit to stationary coil is 5m!

- It is possible to program an intermediate door position **„partly-open“** e.g. for passenger use or for different openings for cars and trucks. With a separate command this position can be requested. For use with mechanic limit switches an additional opening limit switch has to be mounted at this position. Before first programming this switch must be installed, otherwise there will be no possibility for programming in the menu.

Hardware overview

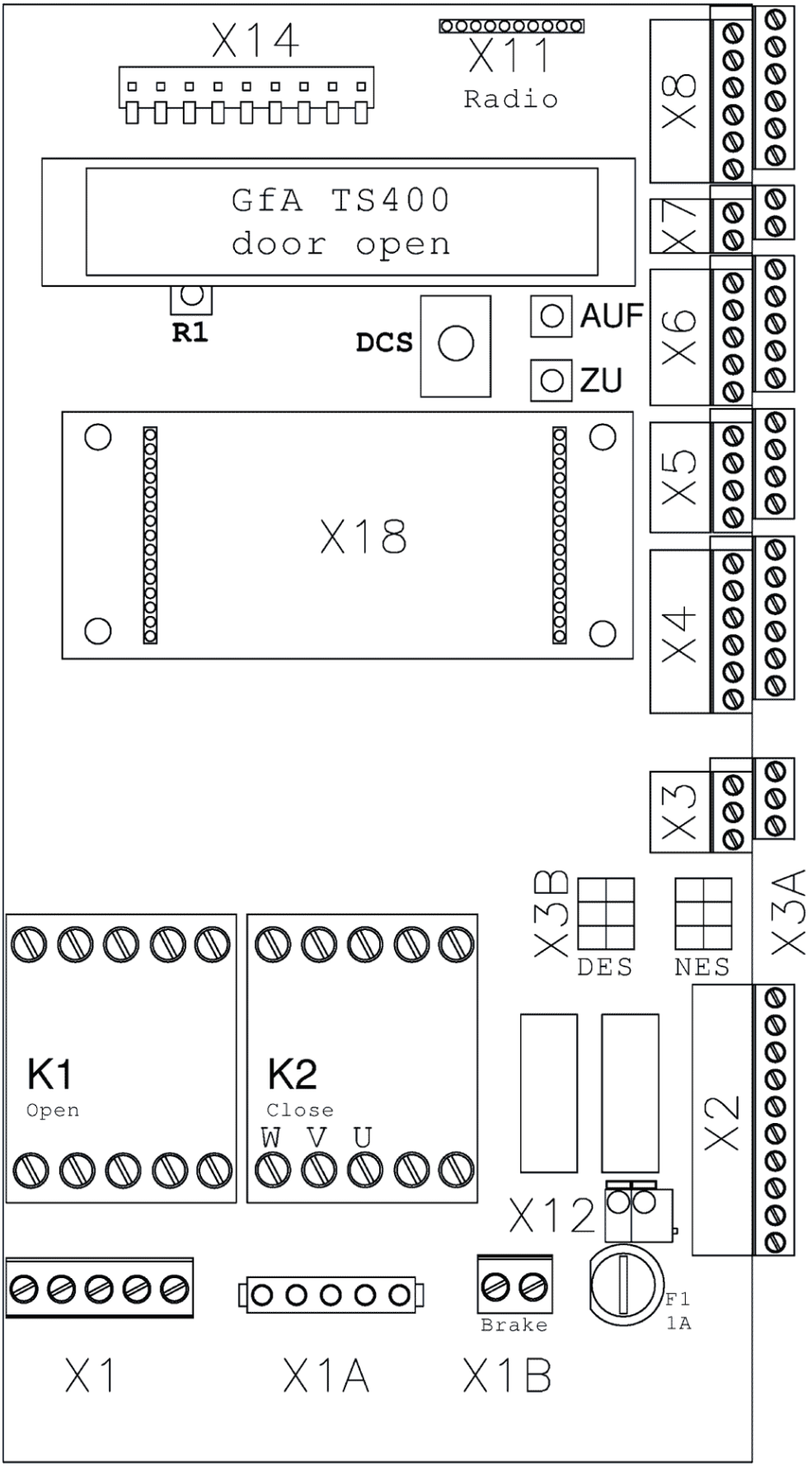

Nomenclature

X1	**Main supply**
X1A	**Motor Connection**
K1	**Contactor open**
K2	**Contactor close** **For use of drives with separate motor connection the drive must be wired direct on the contactor:** **$2_{(T1)}$ = W** **$4_{(T2)}$ = V** **$6_{(T3)}$ = U**
X1B	**Magnetic brake**
X2	**Lights, all-round light, 230V power supply for external use and PE**
X3	**Limit switches / safety circuit from drive** For use of external limit switches these have to be wired on X3
X3A	**NES mechanical end-switch plug**
X3B	**DES digital end-switch plug**
X4	**Command porter / step by step and 24V/DC power supply**
X5	**Command key switch with stop button inside and outside with full view of the door throughout its travel. DEADMAN function.**
X6	**Photo cell 1 and 2**
X7	**Weekly timer ON/OFF latching switch and inductive transmission**
X8	**Safety edges**
X11	**Module radio control**
X12	**230V/AC for internal use**
X14	**Module inductive transmission**
X18	**Modules: status signal - final limit and fault message** **loop-detector (option)**
F1	**Fuse for X2 lights and external power supply 1A**
DCS	**Selector for programming**
AUF	**Command open**
ZU	**Command close**
R1	**Reset**

Functions

There are two different operating-methods for use of the sliding door:

a) DEADMAN – permanent use of the commands to open/close
b) Self-hold – after a short command pulse, the door opens/closes

In self-hold mode the door has to be equipped with all safety devices referring to EN12978 and EN12453. Self-monitoring safety edges, which are approved in use for operator protection must be installed at the door. In case of actuation of the edges the door stops and moves into the opposite direction to free the barrier. Also two light barriers might be installed to give additional secure and to expand the function of the door control. If a light barrier interrupts while the door closes, it stops and opens until open limit.
If a safety device is not installed or defective, the control changes to DEADMAN mode. This mode is only for commands in full sight of the door allowed. Only key-switches inside and outside wired to X5 and also the buttons on the mainboard are designed for this use. The commands porter, step by step, radio control and loop detection will be out of order in this mode.

Adjustable data:

- integrated, detachable **self-closing automatic**. After an adjustable time from 2 to 998 seconds the door closes self-acting out of the open and partly open position. It is possible to set different times for both positions.
- Time and date as well as **weekly-timer**. With an external switch it is possible to disable the weekly-timer. In the LCD this is signed through a “-“ between date and time.
- **Maintenance cycle counter**. If this counter is active, the LCD shows the number of cycles to next maintenance. In case this counter shows zero, the message „Maintenance necessary” displays. The door will stop in open position, only a dead-man command will reset this status for only 100 additional cycles.
- Reaction after interrupting the **light-barriers** in open and part-open position – abort or restart of the open-time.
- Behavior of the **red – light** in position closed and while door is moving
- Monitoring U/V/W while drive is switched on and also while stand still. Adjustable for single or three phase drives. This monitoring system also might be deactivated in the menu.

Further functions

- Run-time monitoring in limit up to 900 seconds. During programming run-time has to be adjusted, with “00s” monitoring is disabled.
- Display of permanent commands, direct information of all occurring errors.
- Readout of cycle-counter and fault memory
- Measuring of 24V power drain as well as reset in case of short-circuits. Also the power drain of the light-barriers is monitored and will be displayed as error in case of overload with more than 70mA

Description of connecting terminals

X1	1 – 5	**Main supply**
	X1A	**Motor connection for use with system cable** For use with a drive with separate motor connection, the cabling has to be done on the K2 contactor: 2 = W, 4 = V, 6 = U
	X1B	**Magnetic brake** 230V AC for magnetic brake with rectifier, permanent turned on if drive is off
X2	1 – 3	**Lights red-green or all-round light** Behavior is adjustable (permanent or flashing) fused through F1 / 1A
	4 – 5	**Power supply 230V AC for external equipment** Fused through F1 / 1A
	6 – 10	**PE for external equipment**
X3	1 – 6	**Screw terminals for cabling of external end-switches or inductive end-switches type XS4P30MB230 or XS4P30BP340D**
	X3A	**Plugable connector for NES**
	X3B	**Plugable connector for DES**
X4	1 – 6	**Three push button OPEN/STOP/CLOSE Porter (Automatic mode)** The open-command is generally of higher rank. If this command is set while the door is closing, the door will open after a short stop. A close-command while the door is opening will only stop. +24 / GND at Terminal 1-6 is suitable for tableau - lighting.
	7 – 8	**Command impulse OPEN/STOP/CLOSE (Automatic mode)** Impulse function: open→stop→close→open→...
	9 – 12	**Power supply 24V DC / 500mA for external equipment** power drain is monitored, internal turn off in case of overload with reset after a few seconds
X5	1 – 4	**Key-switch OPEN/STOP/CLOSE (Deadman mode)** If any safety equipment is faultless the control operates with this commands like in automatic mode. If there is any error in the safety equipment this commands are able to work in deadman mode. As long as the contact is closed the door will operate in the direction required. The open-command is generally of higher rank. If this command is set while the door is closing, the door will open after a short stop. A close-command while the door is opening will only stop. In case of operated Stop is no command possible!
	5 – 8	**Key-switch OPEN/STOP/CLOSE (Deadman mode)** Function is similar to X5: 1-4

DANGER
The terminals X5 are designed only for use in deadman mode. It is not allowed to wire permanent commands (e.g. Clock commands) on these terminals. The whole area has to be visible from the command position!

X6	1 – 5 and 6 – 10	**Photo cell reflective or transmitter - receiver** Possibility to wire two transmitter - receiver or reflective photo cells as safety equipment in closing direction. If the photo cell is interrupted while closing, the door will open after a short stop until open-position is reached. Operation in end position open is adjustable in the menu. Max. current drain for the photo cells is limited at 70mA. If devices with higher current consumption are wired, the control will turn off this supply and display the relevant error.
X7	1 – 2	**weekly timer ON / OFF** Terminal for latching switch to turn ON/OFF the internal weekly timer. If the timer is turned off through this switch, a „-„ will be displayed between date and time.
	3 – 4	**inductive signal transmission** Wiring for stationary coil of inductive transmission. Additional module on Slot X14 necessary! This module has to be activated in menu. Wire of stationary coil to control unit has a maximum length of 5m.
X8	1 – 2	**Safety edge 1** Main edge on door for closing direction
	3 – 4	**Safety edge 2** Edge on door for opening direction
	5 – 6 7 – 8	**Safety edge 3** **Safety edge 4** Edges for opening direction
	9 – 10 11–12	**Safety edge 5** **Safety edge 6** Edges for closing direction
If the main edge is operated while closing, the door opens until end position. Is automatic closing active, the control starts a further attempt to close the door. If the main edge operates again, the door opens and stands still with relevant error display. All other edges will stop the door and start a 3 second move in the opposite direction.		
X11		**Slot radio receiver**
X12		**Power supply 230V**
X14		**Slot ASO inductive transmission**
X18		**Slot for modules: status signal - final limit and fault message** **Loop-detector**

Connecting diagram X1-X3 DES - plugable

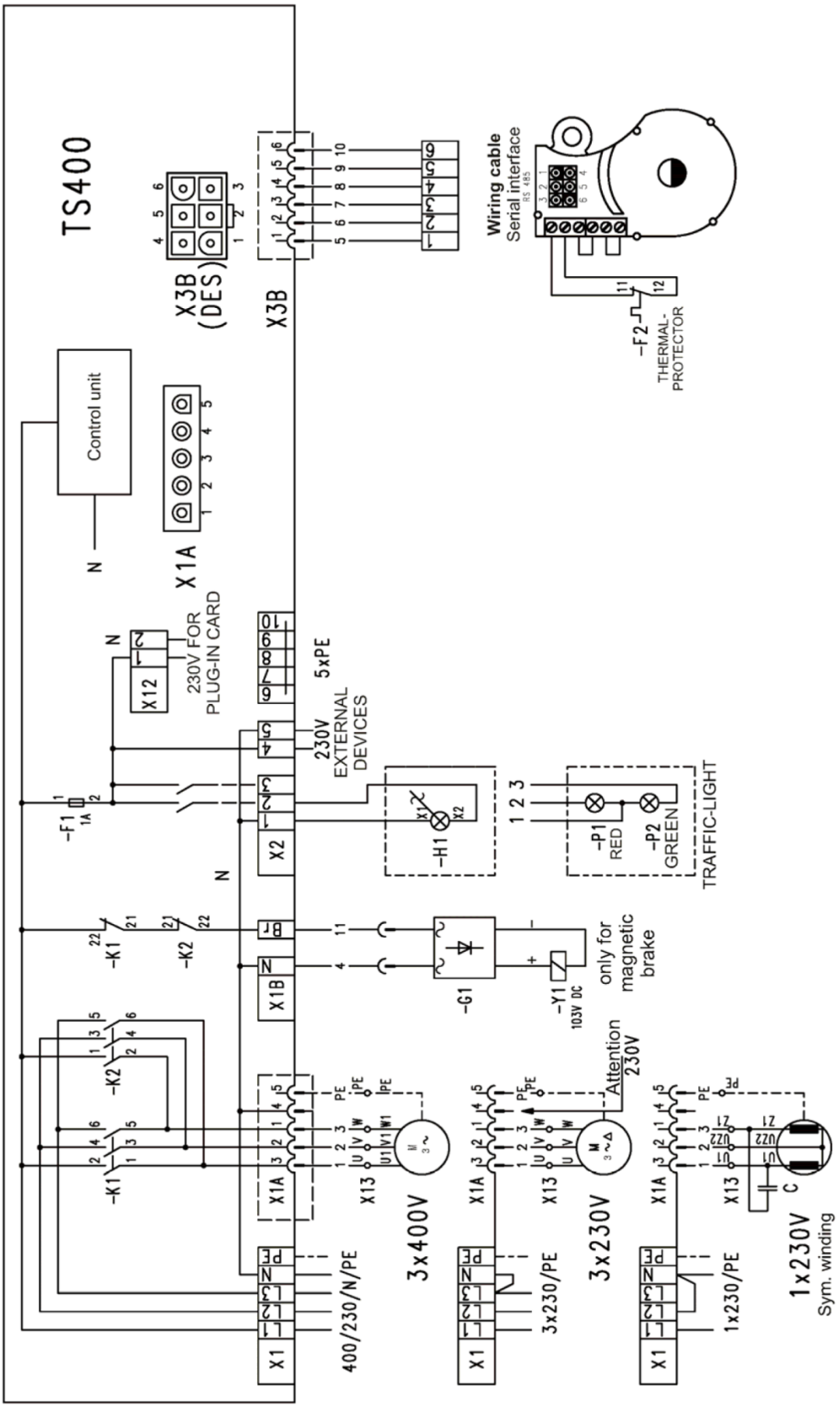

Connecting diagram X1-X3 NES - plugable

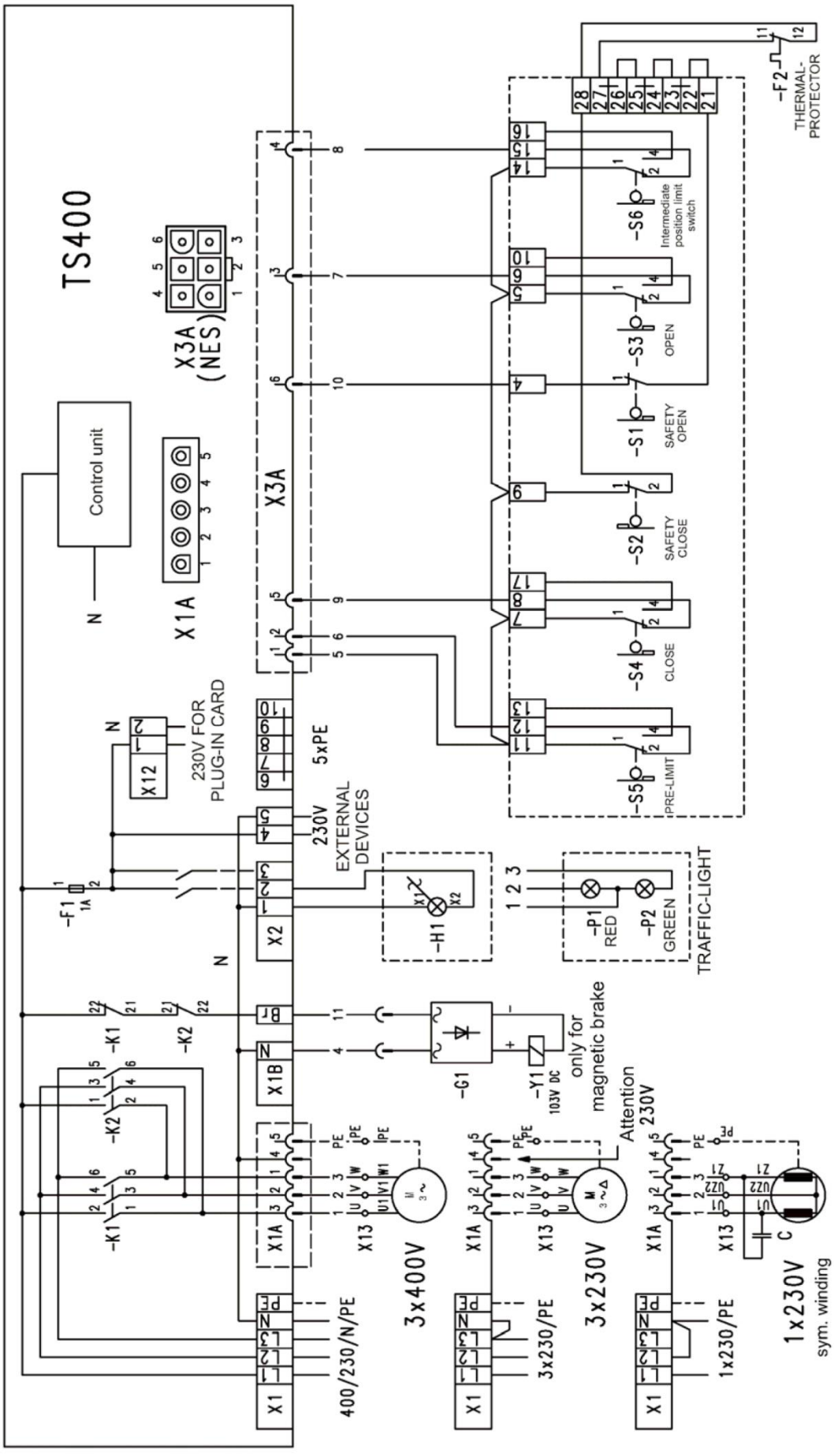

Connecting diagram X1-X3 NES

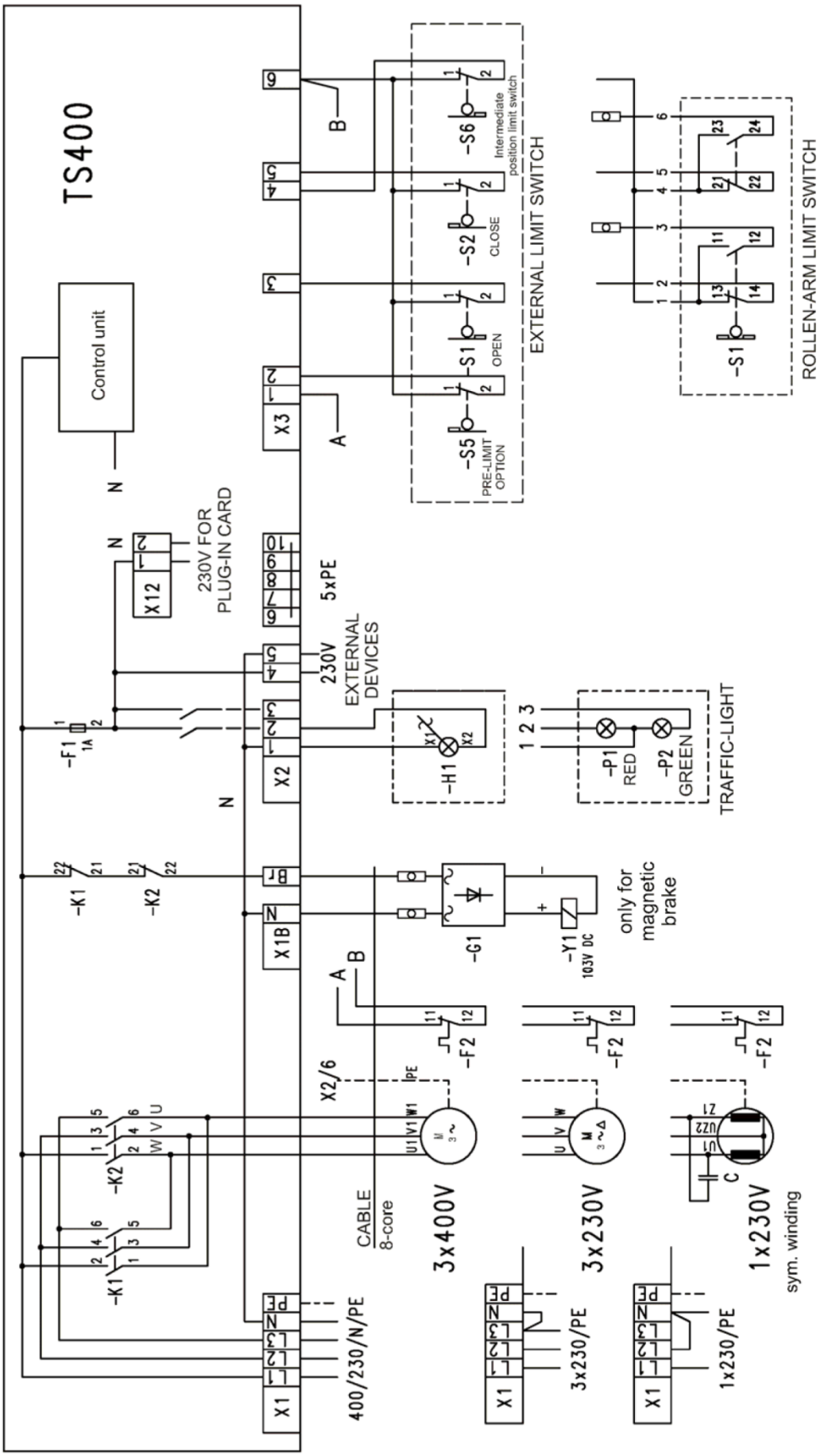

Connecting diagram X3 inductive end-switches

As inductive end switch only use: Schneider Electric XS4-P30MB230 or Schneider Electric XS4-P30PB340D

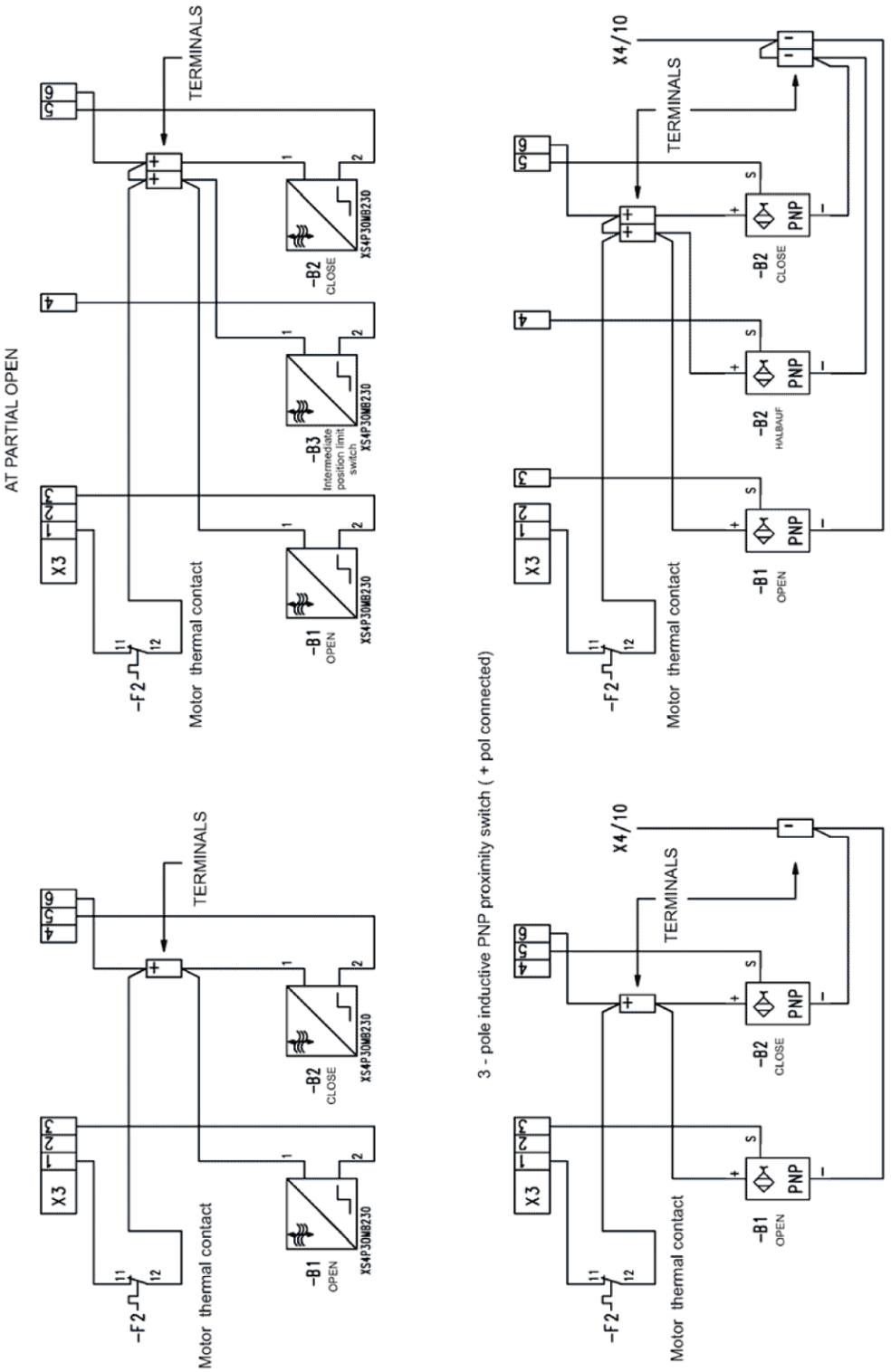

Connecting diagram X4-X5

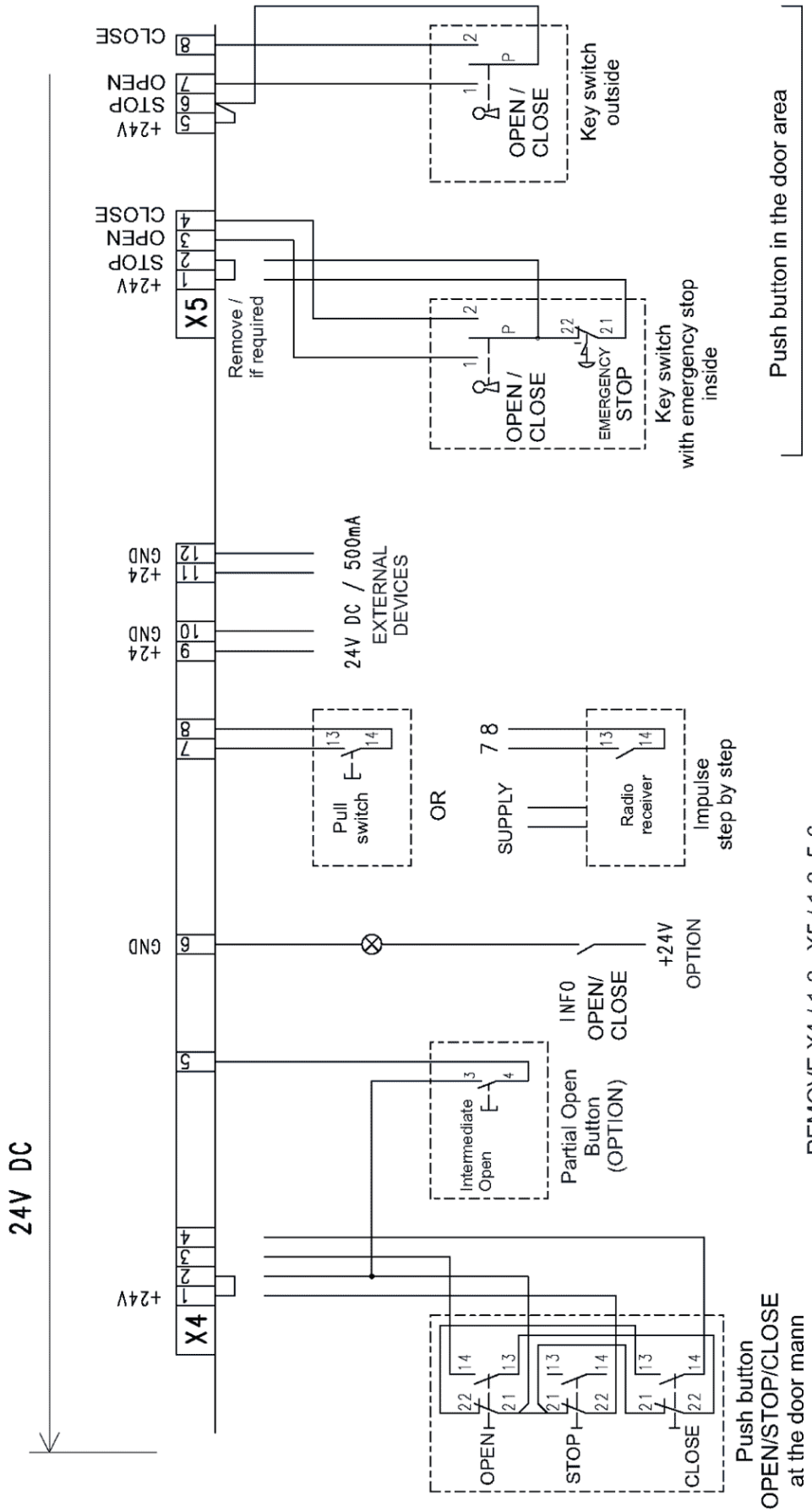

Connecting diagram X6–X8

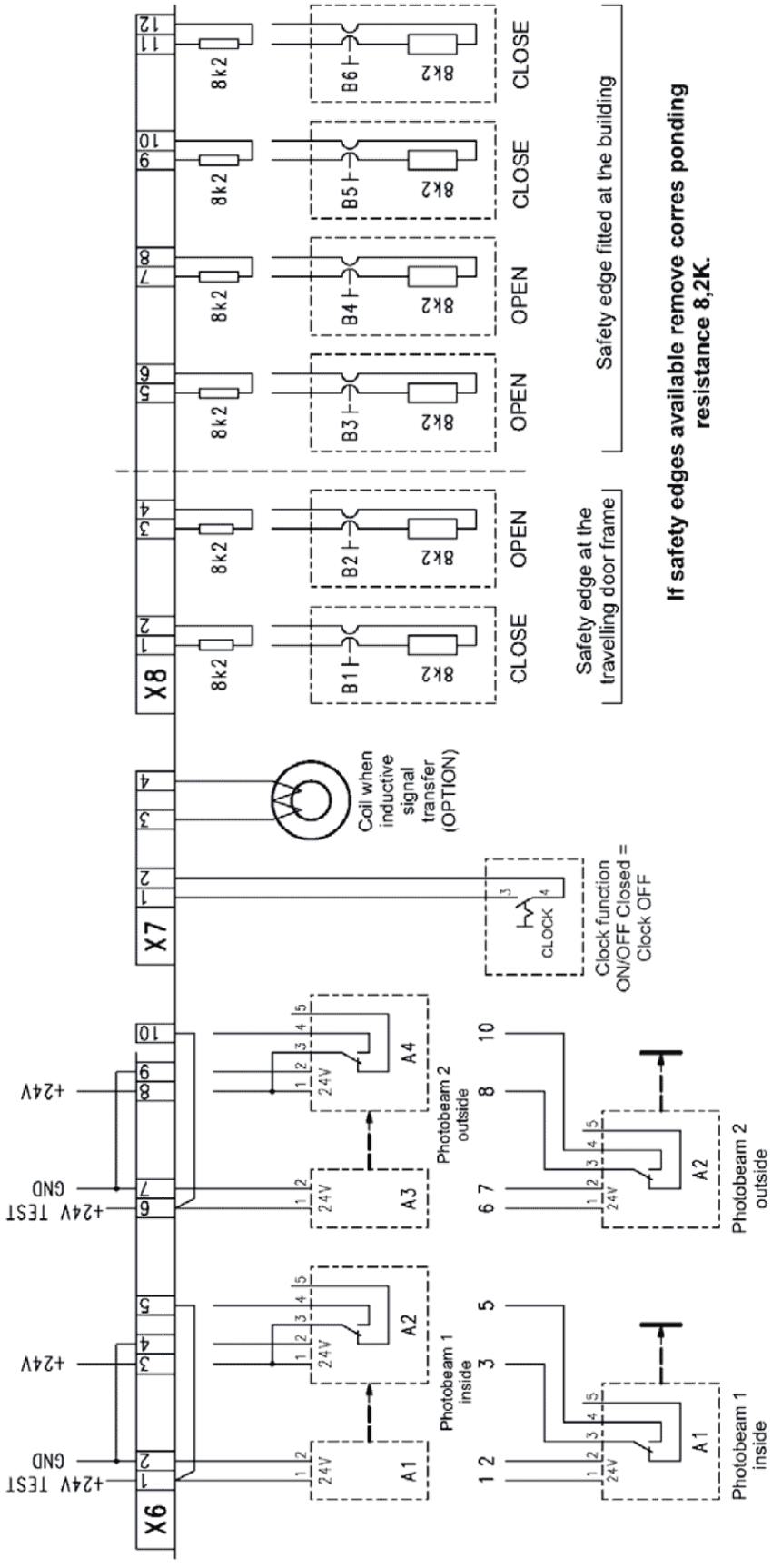

Connecting diagram X7-X8

FIG.: 1

SIGNAL TRANSFER - COILED CABLE

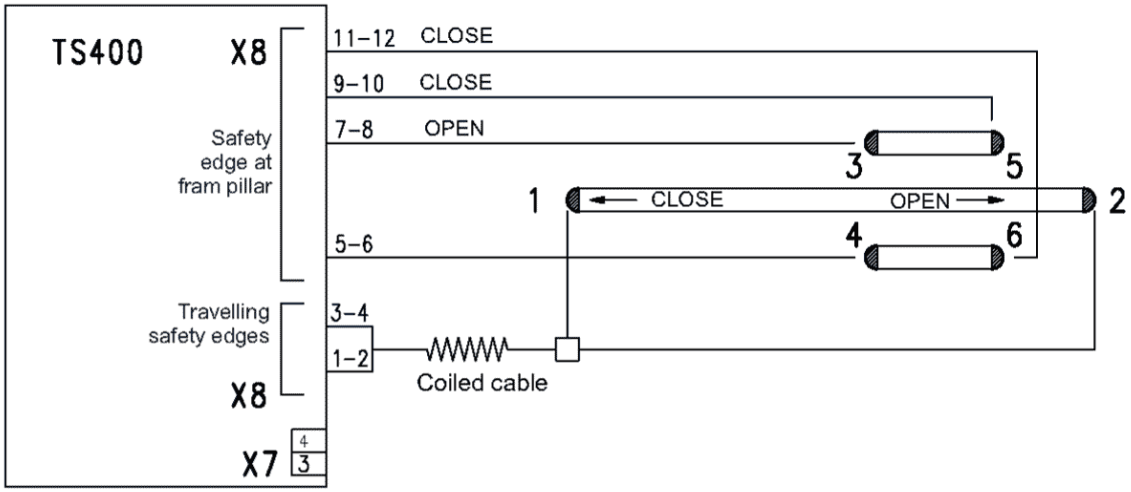

FIG: 2

INDUCTIVE SIGNAL TRANSFER (ASO) INTERNAL EVALUATION

Activate evaluation in the programming

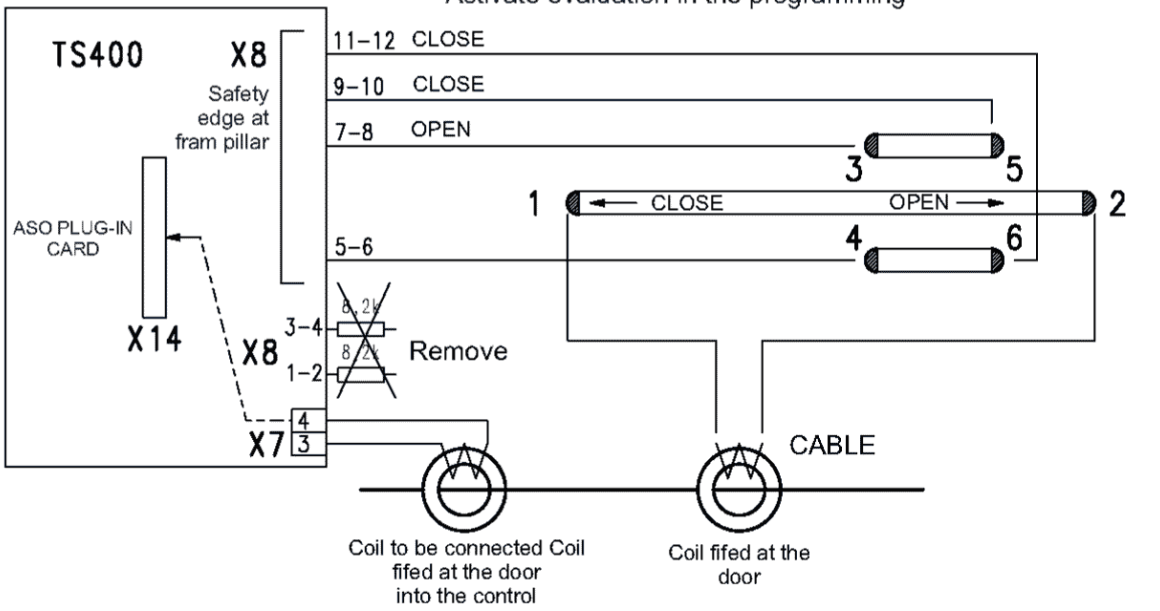

Modules

Functions of the control unit can be expanded by using modules in different slots.
Insert modules only if power supply is turned off!

Following extension modules are available:

- **X11: Radio receiver 2-Chanel**
  Chanel 1 command full open position
  Chanel 2 command partly open position

- **X14: Inductive signal transmission**

  For safety reasons this module has to be adjusted in the menu. The green LED must flash and no red LED is on if you start the detection through menu. Wire of stationary coil to control unit has a maximum length of 5m.

- **X18: This slot is designed to expand the control with additional modules.**

  Max. three modules can be stacked on top of each other, every module is equipped with terminals for cabling.

  - Loop-detector with direction-logic (separate manual)
    - Chanel 1 – command open (with direction-logic → loop 1 before 2)
    - Chanel 2 – command close (with direction-logic → loop 2 before 1)

- **X18:** **Status module** with voltage free relay contact for messaging of OPEN / CLOSE position and error signal

- Signal for message open depends on requested position also for partly open
- Signal Error will change if:
    - Safety edge open
    - Safety edge reversed
    - Testerror inductive transmission
    - Light barrier overload
    - Light barrier interrupted for more than 30 Seconds
    - Fuse F1 broken
    - U/V/W monitoring power supply
    - U/V/W monitoring relay
    - Safety chain open
    - DES error
    - Stop circuit open
    - End switch open error
    - End switch closed error
    - Internal error

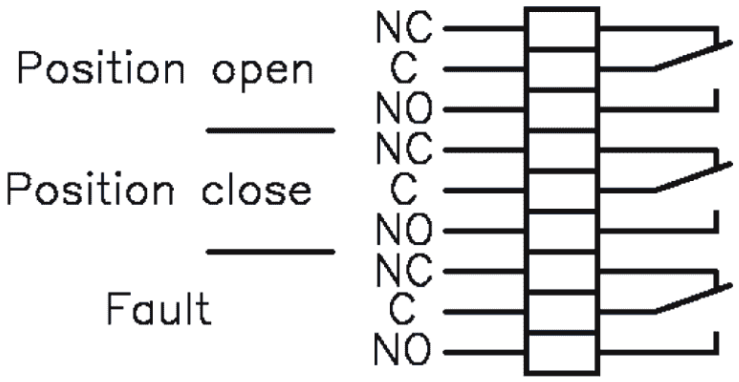

Control programming

Handling

Press DCS to choose and confirm mentioned settings. Rotate to change values, move cursor and stride menu. Default or already changed settings will be displayed in every menu for your information. Right beside the DCS are placed two push buttons for use in porter mode open(AUF) and close(ZU).

Menu structure

Two menu modes are available, installation-menu and user-menu.

- **Installation-menu**
  In case of first time use and also after a reset to factory settings the control automatic changes to installation menu after power up and a short initializing period.
  The control will not work in operating mode until main settings of have been done. It is not possible to skip relevant settings. After settings once have been done and confirmed it will be possible to skip items next time. It is recommended to protect this part of the menu through a password in order that unauthorized personal is not able to change safety-relevant settings.
  You can open this menu at any time through pressing the DCS for a minimum of 4 seconds. If a password is set, at first the correct password is requested, otherwise you will direct enter the installation menu.
  If the last menu item is confirmed, you will automatically change to user-menu.

- **User-menu**
  The user-menu contains settings for automatic closing, weekly timer, warning-light options and display of failure memory.
  You can open this menu at any time through pressing the DCS for about one second.

For simply orientation any menu item has a sequential number Mxx.

Factory-settings are marked with this symbol:

Presentation

The following pages will display every menu item step by step and the adjustable values will be explained:

Installation-menu

You can open this menu at any time through pressing the DCS for at least 4 seconds.

Display indication	Meaning
GfA Elektromaten SELFTEST Vxx	Initialisation of the control unit after power up or after reset, display of software version (Vxx)
→deutsch M10 english francáis	Choose language
GfA Elektromaten Total Cycles: 5	Display of total passed cycles
Enter password M11 →0000	Request of password is only active, if before a password was set. Proceed through confirm on the arrow.
Safety Edge M12 Not detected	Start automatic detection of the connected safety edge by pressing the DCS.
Safety Edge M12 detecting...	Automatic detection running…
Safety Edge M12 8K2 connector X8 inductive transm. Not detected	Possible message: → 8K2 Safety edge wired to X8 → module ASO at X14 detected and tested → for further information see chapter „Faults“, safety edge and transmission system has to be operable Start new detection through turning DCS left, confirm through pressing
limit switch M13 not detected	Start automatic detection by pressing the DCS
limit switch M13 detecting...	Automatic detection running…
limit switch M13 digital DES cam NES not detected	Possible message: → DES detected and tested → NES detected → verify safety-circuits and correct connector placement Start new detection through turning DCS left, confirm through pressing

Display indication	Meaning
phase monitoring M14 1-phase 3-phase off	Adjustment of the used motor-type, if fault „check mains“ occurs frequent, disable monitoring by confirming „off“. In this case also fuse F1 will not be monitored any more.
end-limit open M15 reached? reached!	Use the push buttons with label „AUF“ to open and „ZU“ to close the door. Confirm if the correct position open is reached. If cam NES is used the „?“ changes into „!!!“, as soon the switch is actuated. Only in this case confirm is possible!
end-limit close M16 reached? reached!	Use the push buttons with label „AUF“ to open and „ZU“ to close the door. Confirm if the correct position closed is reached. If cam NES is used the „?“ changes into „!!!“, as soon the switch is actuated. Only in this case confirm is possible!
Partly open pos. M17 adjust? skip no yes	(Menu item does not occur, if no limit switch for position partly open is installed before starting the adjustment of end-limits! Only in case of use with cam NES) Skip adjustment and leave menu item Disable partly open position Adjust position
Partly open pos. M17 reached? reached!	Use the push buttons with label „AUF“ to open and „ZU“ to close the door. Confirm if the correct position partly is reached. If cam NES is used the „?“ changes into „!!!“, as soon the switch is actuated. Only in this case confirm is possible!
Fine adjustment M18 End-limit open: 0	Only if DES is used Fine adjustment of end limit open. With this item the position open will direct be changed in a very small range depending on the used dirve. The Position can be changed to a maximum of 10 points. Positive values will open the door a bit more and negative will open the door a bit less.
Fine adjustment M18 End-limit close: 0	Only if DES is used Fine adjustment of end limit close. With this item the position close will direct be changed in a very small range depending on the used dirve. The Position can be changed to a maximum of 10 points. Positive values will close the door a bit more and negative will close the door a bit less.

Display indication	Meaning
Motion time out M88 00s	Adjust regarding to measured time from end-position to end-position with a bonus. If the door doesn´t reach end-position during continuous movement, the control will stop. Adjustment of “00s” will disable this function.
Lights pos.close M19 OFF ON	Adjust red light in closed position → in closed position red light OFF → in closed position red light permanent ON
Lights clearance M20 ON Flashing	Adjust red light during clearance → permanent ON for use with all-round light → flashing for use with red-light
Red light prew. M21 OFF ON	Adjust red light prewarning → no prewarning → before **every** movement three seconds prewarning
Cycles to maint. M22 Infinite	Adjust cycles until maintenance is necessary in steps of 1000 cycles. If zero is adjusted the maintenance counter is set to infinite therefore disabled. If it is activated, the adjusted number will count to 0, if zero is reached, the door will stop in open position. By setting a deadman-command the counter will be reset to max. 100 cycles.
set password M23 →0000 (0000 = no) **→9999 (0000 = no)**	Set password following special codes are possible: → no password will be set **→ total reset of the control to factory settings**
The control only can be reset to factory settings by adjusting 9999 in this menu item. In this case all settings except the no. of total cycles will be deleted! A reset to factory settings is unconditional necessary in case of change of end-limit switch, software update or change of installation!	

After a password is set follows an automatic change form installation-menu to user-menu.

User-menu

You can open this menu at any time through pressing the DCS for about one second, following settings are possible:

Display indication	Meaning
`date/time adjust M30` `→ 01.01.13 12:00`	Adjust date and time: Move the cursor by turning DCS left or right, choose the selected digit by pressing the DCS. Now the value changes through turning left or right, if the correct value is adjusted confirm by pressing the DCS. After all digits are adjusted move cursor to the arrow „→“ and confirm by pressing the DCS again.
`Weekly timer adj M31`	Confirm if weekly timer should be activated
`Mo Tu We Th Fr -- --` `--:-- Open --:-- Cl→`	One complete open time is shown in the display. In row one it is possible to choose every day of the week, in row two the opening time, partly or full open and the time for automatic closing is adjustable. By confirm on the arrow “→” the cycle time will be saved and a new display will be offered to program additional cycles. In this way up to 30 times can be saved. ATTENTION: if only in one of the times “--“ is displayed, the full cycle will be deleted by confirm on the arrow “→”! To leave this menu item confirm on the arrow „→“ without entering times! To review all programmed cycles open this menu item again and confirm any time on the arrow again. All times will be displayed in chronological order. **For use with weekly timer it is necessary to activate automatic closing!**
`Last fault M32`	Information about the last 33 faults with indication of date and time. This list only contains faults, which also have been signaled by relay on status board. For example a short interruption of the photo cell will not be taken over into this list. A detailed chart of these faults you will find on page 21. Faults get a sequential number from 1(new) to 33(old). To leave this menu item confirm by DCS again.

Display indication	Meaning
Open time M33 060s (auto-close) 000s (no auto-close)	Adjustment of auto-closing time in steps of 2 seconds in the range of 2 to 998 seconds with additional time for clearance. → automatic closing active → automatic closing disabled
partly open time M34 060s (auto-close) 000s (no auto-close)	(menu item only appears, if partly open position was set during installation and auto-close for full open position is active) Adjustment of auto-closing time for position partly open. → automatic closing from partly open position active → automatic closing from partly open position disabled
clearance time M35 03s	(menu item only appears if auto-closing is active) Adjustment of clearance time before auto-closing in the range of 1 to 99 seconds.
photocell funct. M36 immediate close restart open time no function	(menu item only appears if auto-closing is active) Adjustment of photo-cell function ind door open position → direct change to clearance time and immediate close → restart of open time → no effect on open time
Adj. finished M37 start operating mode	With confirm of this item all settings will be saved and the control unit will restart in operating mode.

ATTENTION

After saving all settings the control will restart in operating mode after a short selftest. This will take at least four seconds. According to the position of the door and the made settings it is possible that an automatic closing will be set up now!

Status indications

Considerable information about control and door status, faults and active commands will be given through the LC-Display. On these pages you will get an overview about possible conditions and some comments and reasons.

Depending on surrounding conditions it might take a little time until first status will be displayed after power-up.

GfA Elektromaten Selftest Vxx	Initialisation after power-up for about 2-3 seconds.
01.01.14 23:59 43210 door closed	**Row 1** shows in operating mode date, time and remaining cycles to maintenance. If maintenance counter is disabled total cycles will be displayed. A minus between date and time indicates that the weekly timer is disabled by external switch. **Row 2** primary shows active commands with sequential command number Cxx, otherwise the door status with sequential status number Sxx is displayed.

Command messages:

```
Porter open       C10
por. partly open  C11
porter close      C12
impulse           C13
open              C14
close             C15
radio ch.1        C16
radio ch.2        C17
clock open        C18
clock part-open   C19
loop 1 (open)     C20
loop 2 (close)    C21
```

Door status messages:

```
door closed       S10
door open         S11
door partly open  S12
door opening      S13
door closing      S14
door stand still  S15
```

The message door stand still will appear, if movement has been stopped at any not defined position.

Fault messages - reasons and fixing

If any fault appears display changes from information about door status to fault message immediately. In row one the message “FAULT:” and the fault number Exx will be displayed and in row 2 you will find detailed information about the fault:

Display indication	Meaning
FAULT: E10 Safety edge X active	Mentioned safety edge is actuated ***check safety edge and cables***
FAULT: E11 Safety edge reversed	Movement has been interrupted because a fault in a safety edge ***Remove obstruction and set new command***
FAULT: E12 Safety edge X open	Circuit at mentioned safety edge is open ***check cables***
FAULT: E13 ASO Test	Fault while test of module ASO for inductive transmission ***Check inductive transmission system and set new command***
FAULT: E14 Overload photo cellX	max. drain at mentioned photo cell is reached ***check consumption of photo cell,*** ***if necessary wire external equipment to X4***
FAULT: E15 Photo cell X open	Mentioned photo cell is interrupted ***Check alignment, cables and function***
FAULT: E16 Fuse F1	Overload through lights or external equipment at X2: ***Renew fuse F1 1A***
FAULT: E17 Check mains	Fault in monitoring of U/V/W: While movement ohne phase is missing ***Check Main supply and menu item „phase monitoring“ reset control***
FAULT: E18 Check main contactor	Fault in monitoring of U/V/W: In standstill one phase is detected: ***Reset control – if this occurs again replace control***
FAULT: E19 Safety circuit open	Safety circuit or thermal protector interrupted ***check safety circuit***
Limit switch E20 not detected	Safety circuit or thermal protector interrupted or at least one stop circuit is open ***Check safety circuit and stop circuit***

Display indication	Meaning
FAULT: E21 DES error	Fault in communication with DES ***Power off / wait 30 seconds / power up, if necessary replace control, cable or DES***
FAULT: E22 DES out of range	Reported position is permanent out of valid range ***Reset to factory settings and adjust all settings again***
FAULT: E23 stop circuit open	Stop is hold down or emergency stop is latched
FAULT: E24 end-limit open def.	NES fault, end-limit close is reached and end-limit open is still actuated ***Check end-limit and cable***
FAULT: E25 end-limit close def.	NES fault, end-limit open is reached and end-limit close is still actuated ***Check end-limit and cable***
Safety edge E26 not detected	Depending on the used system for signal transmission check system, all safety edges and transmission has to work faultless.
FAULT: E27 internal fault	Selftest of software incorrect, ***Reset control, if fault appears again replace control***
FAULT: E28 travel time over.	The adjusted time in menu “motion time out” will be measured and compared while the door is travelling between the final positions. If this adjusted worth will be exceeded “travel time over.” appears in the display (this is exceeded running time). ***Reset control, review “motion time out” settings***
FAULT: E29 direction fault	Fault occurs only if DES is used and after the first installation phases are interchanged. This entails a change in the direction of movement of the door. ***Check phases and possibly change cabling***

If a fault appears repeatedly although no electrical reason is identifiable we recommend to reset the control to factory settings and adjust all settings again (see page 25).

If while adjusting the end-limits is no movement possible, please check following reasons:

- Is any stop circuit closed/bridged?
- If the control stops after a short movement, the phase monitoring might be set wrong → reset control and adjust settings.

Declaration of Incorporation

pursuant to Machinery Directive 2006/42/EC for a partly completed machine Appendix II Part B

Declaration of Conformity

pursuant to EMC Directive 2014/30/EU

Firma
Schöfmann
Steuerungselektronik GmbH
Brenslauer Weg 31
D-82538 Geretsried

We,

Schöfmann Steuerungselektronik GmbH

hereby declare that the product specified in the following complies with the above-mentioned EC Directive and is only intended for installation in a door.

Door control TS 400

Applied standards

DIN EN 12453:2001-02	Doors – Safety in use of power operated doors
DIN EN 12978:2009-10	Safety devices for power operated gates and doors
DIN EN ISO 13849-1:2016-06	Safety of machinery - Safety-related parts of control systems - Part 1: General principles for design
DIN EN 60335-1:2012-10	Safety of electrical devices for the use in the household and similar purposes– Part 1: General requirements
DIN EN 61000-6-2:2006-03	Electromagnetic compatibility (EMC) – Part 6-2 Generic standards – Immunity standard for industrial environments
DIN EN 61000-6-3:2011-09	Electromagnetic compatibility (EMC) – Part 6-3 Generic standards – Emission standard for residential, commercial and light-industrial environments

On reasoned request, we undertake to submit the special documents for this partly completed machine to the supervisory authorities.

Partly completed machinery according to EC Directive 2006/42/EC is only intended to be installed in, or combined with, other machinery (or other partly completed machinery/systems) to form a completed machine pursuant to the Directive. Therefore, this product may be put into operation only when it has been determined that the complete machine/system in which it has been installed complies with the provisions of the above-mentioned directives.

Geretsried, 10.07.2017

Marcus Oeltjebruns
Managing Director

Signature

Lifetime / doorcycles

The control panels are working with electro mechanical contactors. These contactors have generally a limited life time, this depends on the switched power and the amount of switching cycles. Therefore we recommend to replace the control when the confirmed lifetime is reached.

Relation between switched power and amount of cycles describes following diagram:

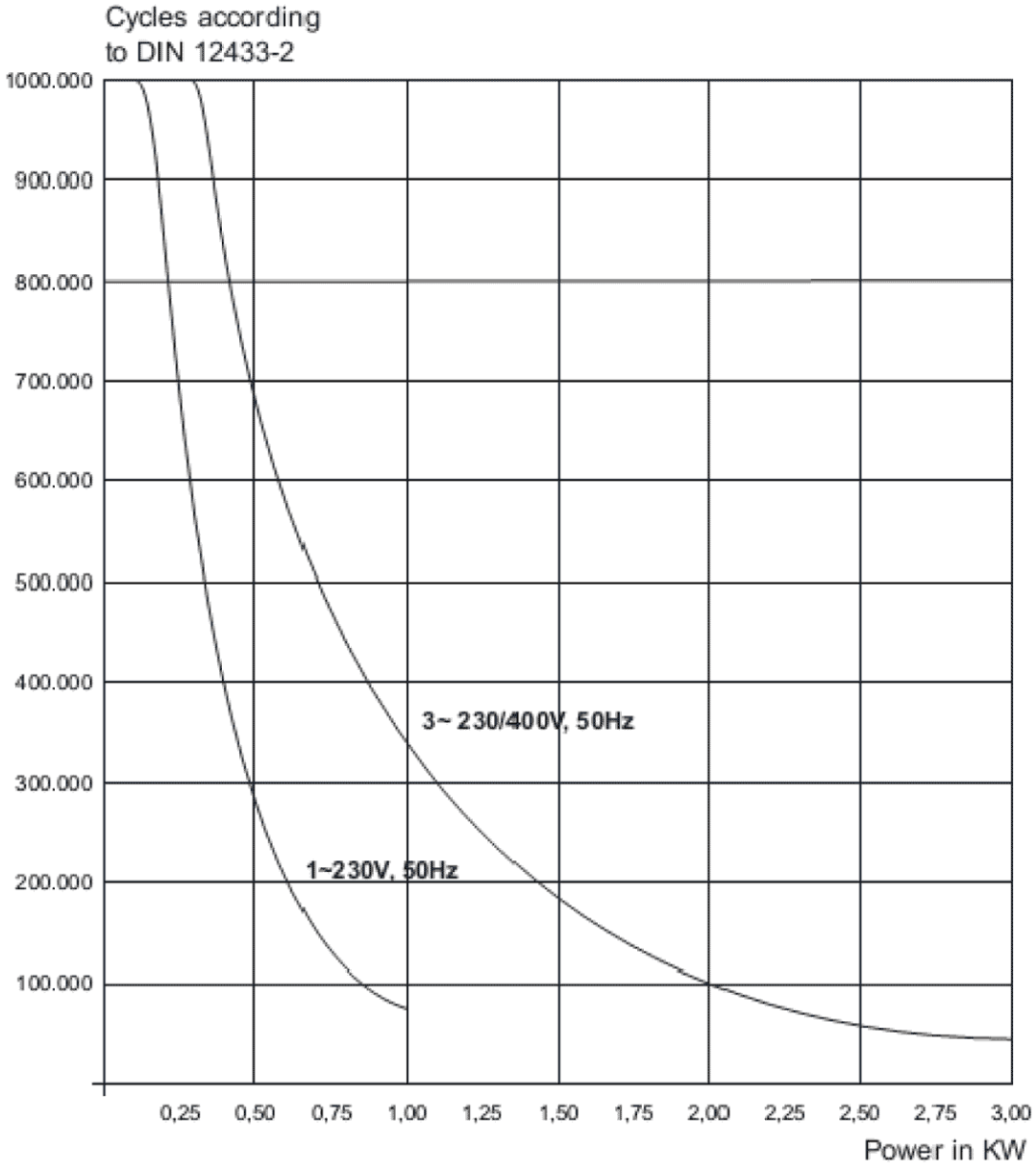

Technical specifications

Housing dimension:	230x300x85mm (WxHxD)
Protection class:	IP55
Mounting:	vertical free of vibration
Main supply:	three-phase: 3 x 400V / 230V, N, PE, 50-60Hz single-phase: 1 x 230V, N, PE, 50-60Hz
Output rating:	2,2 kW
Main supply fuse:	10A delayed
Power consumption control:	13VA
External supply:	230V via L1 and N, safety fuse F1, 1A 24V DC, 500mA, self-resetting
Traffic light contact:	230V max. 40W, safety fuse F1, 1A
Working temperature range:	-20°C ….+ 65°C
Humidity:	up to 93% non condensing