Installation instructions

Door control

TS 959

Hold-to-run control

Version: 51171547

-en-

Version: h1 / 03.2017

0000000 0000 51171547 XXXXX

GfA ELEKTROMATEN GmbH & Co. KG
Wiesenstraße 81 • 40549 Düsseldorf
www.gfa-elektromaten.de
info@gfa-elektromaten.de

Contents

1 General safety information 5
2 Technical data 6
3 Mechanical installation 7
4 Electrical installation 8
Connection cable connection overview 9
Limit switch configuration, screwable version up to year of construction in 1997 10
Limit switch configuration, single limit switches 10
Carrying out the electrical installation 11
Mains supply 12
Mains connection to control 12
Completing the electrical installation 12
Overview of control 13
5 Commissioning of the control 14
DES: Rapid adjustment of final limit positions 14
NES: Rapid adjustment of final limit positions 15
6 Advanced electrical installation 16
External supply X1 16
Emergency stop X3 16
X20 Relay contact 16
External Control device X5 16
Connection of spiral cable 16
7 Control programming 17
8 Table menu items 18
Door operating modes 18
Door positions 18
Door functions 19
Safety functions 19
Maintenance cycle counter 20
Readout of Data memory 21
Deleting of all settings / Readout GfA stick 21
9 Safety devices 22
X2: Input, door safety switch function 22
X3: Input, emergency stop 22

10 Functional description 23
X1: Mains supply of the control and supply of external devices 23
X5: Input, control device 24
Door operating mode “Extended hold-to-run“ 24
Potential-free X20 Relay contact 25
Force monitoring (DES only) 25
Travel time monitoring (NES only) 26
Maintenance cycle counter 27
Short-circuit/overload display 27
Standby function 27
11 Status display 28
12 Explanation of symbols 32
13 Declaration of Incorporation/Declaration of Conformity 34

Symbols

Warning - Risk of injury or danger to life!

Warning - Danger to life from electric shock!

Note - Important information!

▶ **Prompt** - Required action!

Illustrations show example products. Differences from the delivered product are possible.

1 General safety information

Specified normal use

The door control is intended for a power-operated door with a drive unit (NES/DES GfA limit switch system).

The safe operation is only guaranteed with specified normal use. The drive unit is to be protected from rain, moisture and aggressive ambient conditions. No liability for damage caused by other applications or non-observance of the information in the manual.

Modifications are only permitted with the agreement of the manufacturer. Otherwise the manufacturer's Declaration shall be rendered null and void.

Safety information

Installation and commissioning are to be performed by skilled personnel only.

Only trained electrical craftsmen are permitted to work on electrical equipment. They must assess the tasks assigned to them, recognise potential danger zones and be able to take appropriate safety measures.

Installation work is only to be carried out with the supply off.

Observe the applicable regulations and standards.

Coverings and protective devices

Only operate with corresponding coverings and protective devices.

Ensure that gaskets are fitted correctly and that cable glands are correctly tightened.

Spare parts

Only use original spare parts.

2 Technical data

Series	TS 959	
Dimensions W x H x D	155 x 386 x 90	mm
Installation	Vertical, free of vibration	
Operating frequency	50 / 60	Hz
Supply voltage (+/- 10%)	1 N~230 V, PE 3 N~230 / 400 V, PE 3~230 / 400 V, PE	
Output power for drive unit, maximum	3	kW
Protection per phase, on-site	10-16	A
External supply voltage: X1/L, X1/N (protection via F1 micro-fuse)	1 N~230 V	
	1,6	A time-lag
Control inputs	24	V DC
	Type 10	mA
Relay contacts	1 potential-free changeover contact	
Load of the relay contact ohmic/inductive	230 V AC, 1 A	
	24 V DC, 0,4 A	
Control power consumption	4	W
Temperature range	Operation: -10..+50 Storage: +0..+50	°C
Air humidity	up to 93 % non-condensing	
Protection class of housing	IP54	
Compatible GfA limit switch	NES (mechanical limit switch) DES (digital limit switch)	

3 Mechanical installation

Control installation!

- Indoor use only
- Mounting only on even ground that is free of vibration
- Only mount in the vertical position
- Door must be in clear view from place of installation

Requirements

The permissible loads on walls, mountings, connection and transmission elements must not be exceeded.

Mounting

The control is mounted via 4 elongated holes

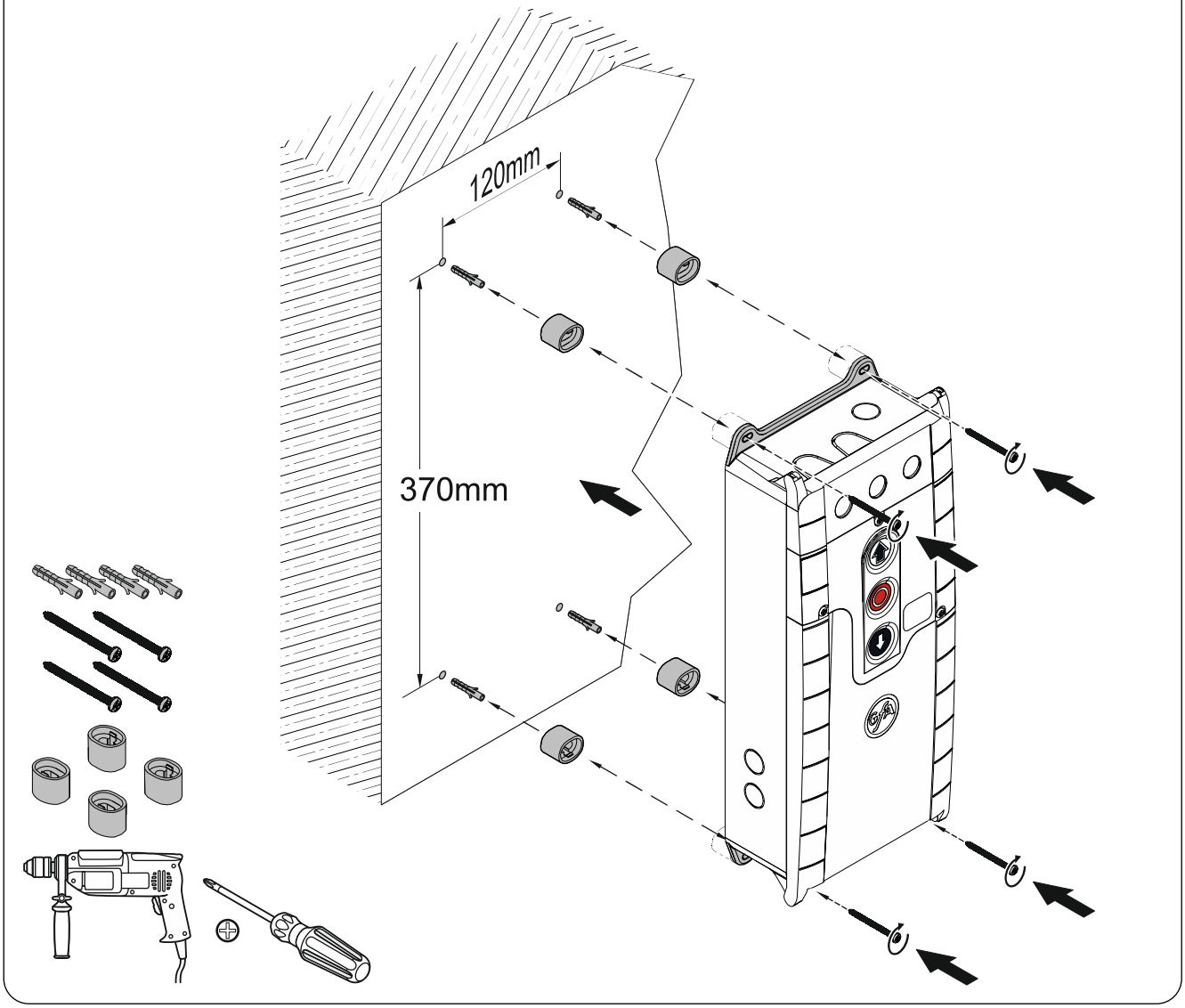

4 Electrical installation

Warning - Danger to life due to electrical current!

- Disconnect the cables (mains OFF) and check that the supply is off
- Observe the applicable regulations and standards
- Ensure proper electrical connection
- Use suitable tools

On-site backup fuse and disconnector unit!

- Connection to the indoor installation via an all-pole disconnector unit, with current ≥ 10 A as per EN 12453 (e.g. CEE plug connector, main switch)

Observe the installation instructions of the drive unit!

Connection cable connection overview

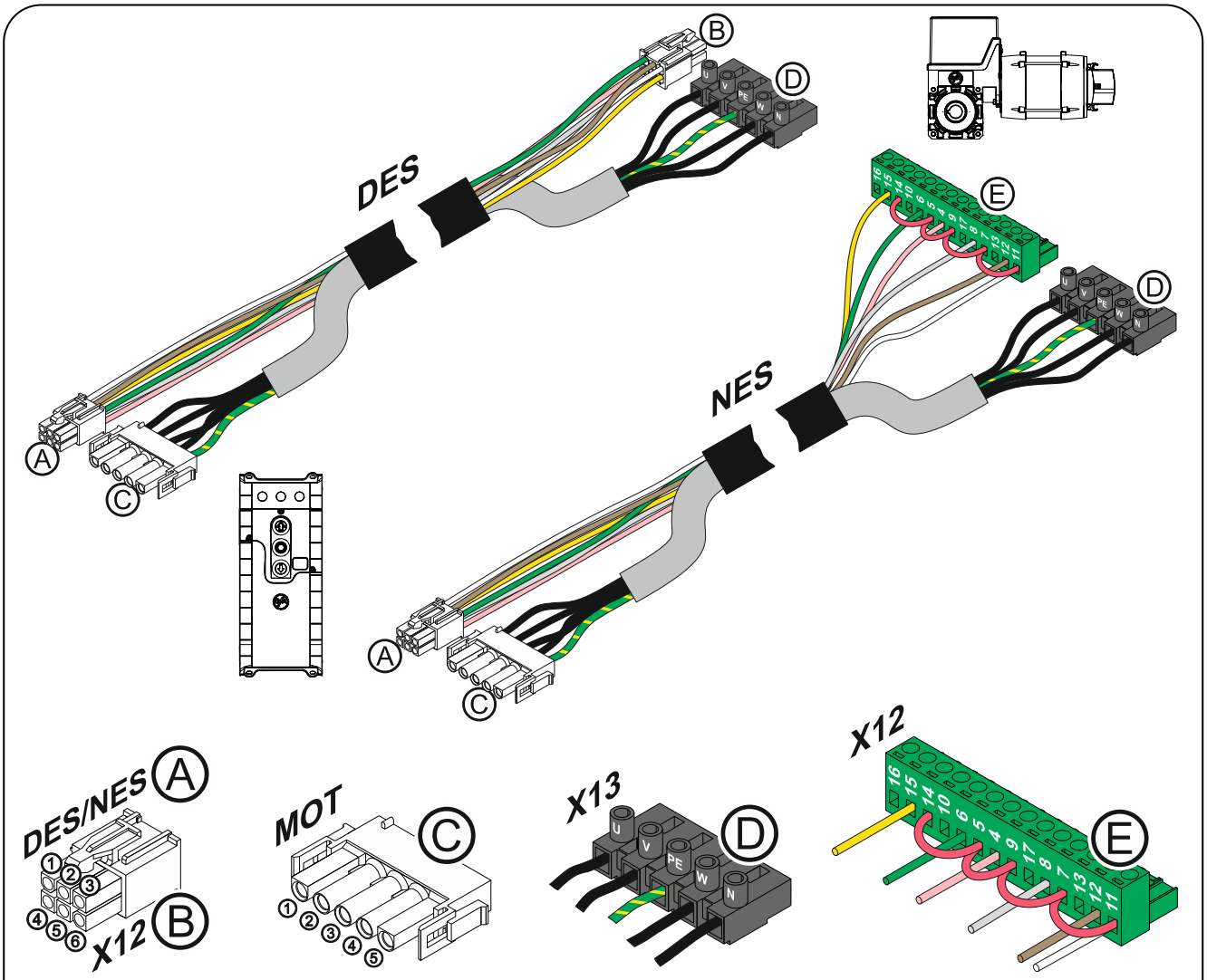

Ⓐ DES →		Ⓑ X12 DES		Ⓒ MOT →		Ⓓ X13	
Pin	**Core**	**Pin**	**Description:**	**Pin**	**Core**	**Term.**	**Description:**
①	5/wh	①	+24 V safety circuit	①	3	**W**	Phase W
②	6/bn	②	Channel B (RS485)	②	2	**V**	Phase V
③	7/gn	③	Ground	③	1	**U**	Phase U
④	8/ye	④	Channel A (RS485)	④	4	**N**	Neutral conductor (N)
⑤	9/gy	⑤	Safety circuit	⑤	PE	**PE**	
⑥	10/pk	⑥	8 V DC supply voltage				

Ⓐ NES →		Ⓔ X12 NES	
Pin	**Core**	**Term.**	**Description:**
①	5/wh	**11**	Limit switch common +24 V, wire link to: 7, 9, 5, 14
②	6/bn	**12**	S5 Auxiliary limit switch
③	7/gn	**6**	S3 Open limit switch
④	8/ye	**15**	S6 Auxiliary limit switch
⑤	9/gy	**8**	S4 CLOSE limit switch
⑥	10/pk	**4**	Safety circuit

Limit switch configuration, screwable version up to year of construction in 1997

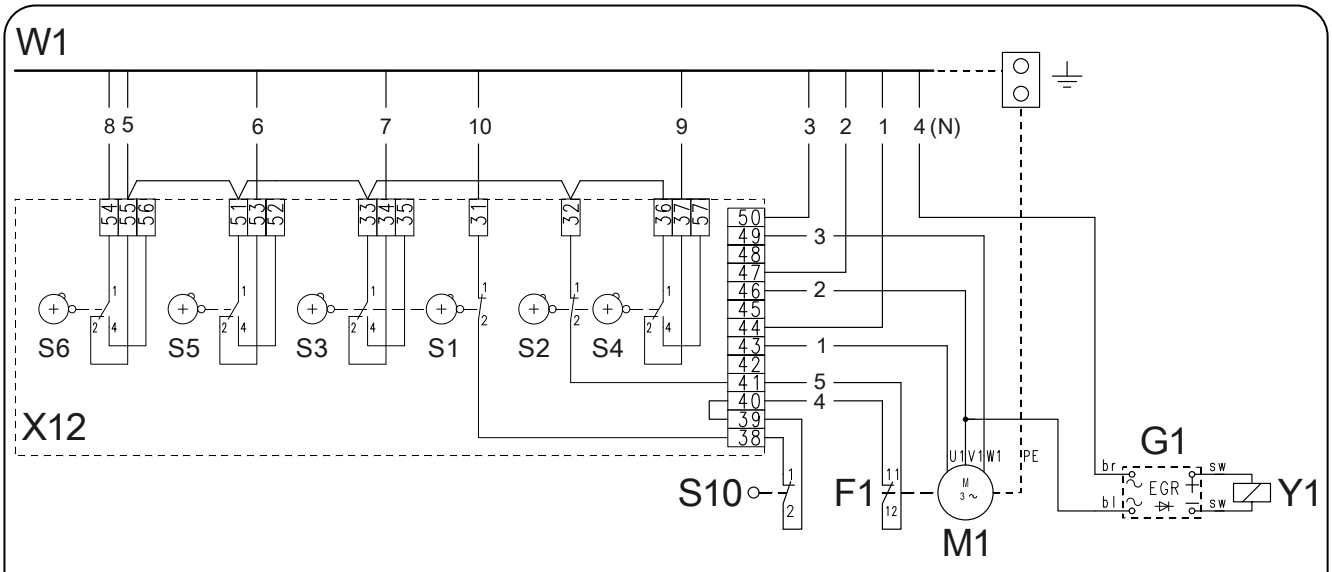

F1	Thermal contact	**X12**	Limit switch board
G1	Rectifier	**S1**	Emergency OPEN limit switch
M1	Motor	**S2**	Emergency CLOSE limit switch
S10	Emergency manual operation	**S3**	OPEN limit switch
W1	Connection cable	**S4**	CLOSE limit switch
Y1	Spring-loaded brake	**S5**	Auxiliary limit switch
		S6	Auxiliary limit switch

Limit switch configuration, single limit switches

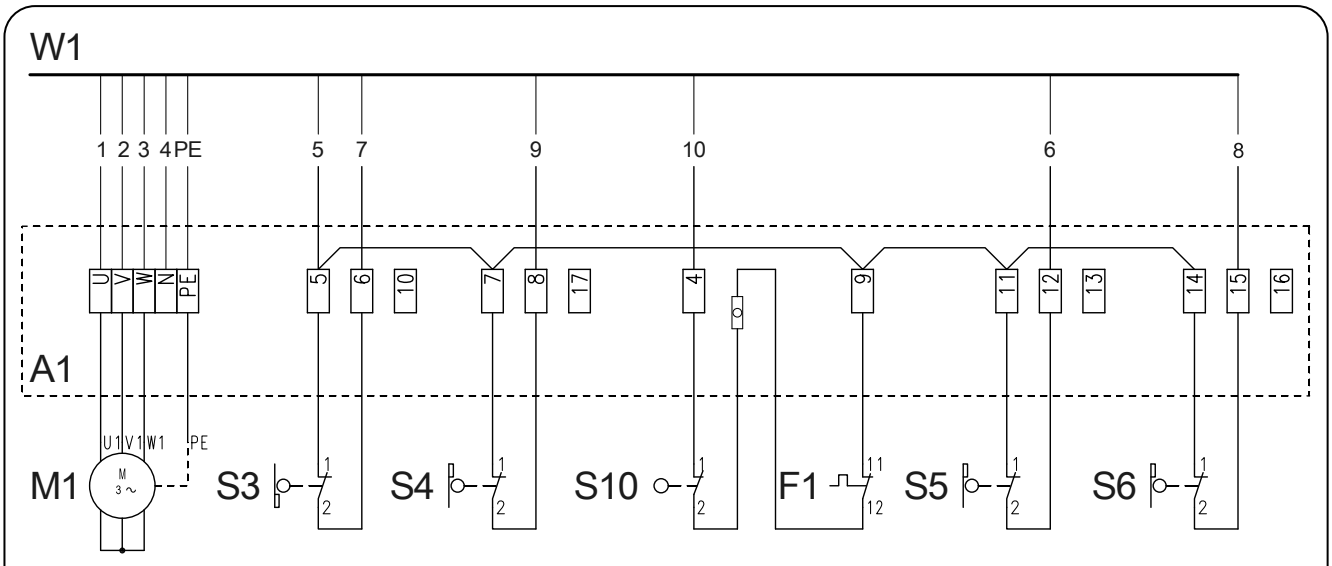

A1	Terminal box	**S3**	OPEN limit switch
F1	Thermal contact	**S4**	CLOSE limit switch
M1	Motor	**S5**	Auxiliary limit switch
S10	Emergency manual operation	**S6**	Auxiliary limit switch
W1	Connection cable		

Carrying out the electrical installation

- Remove covers.

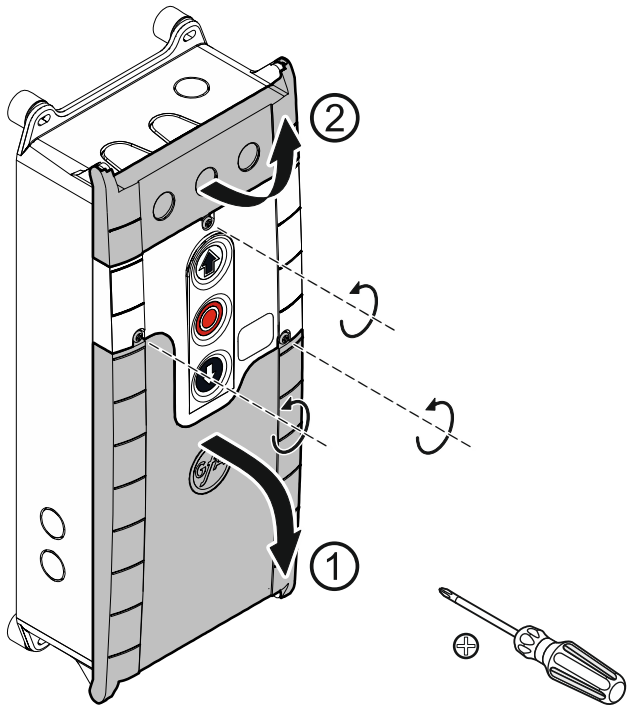

- Open cable entry ① or ②.

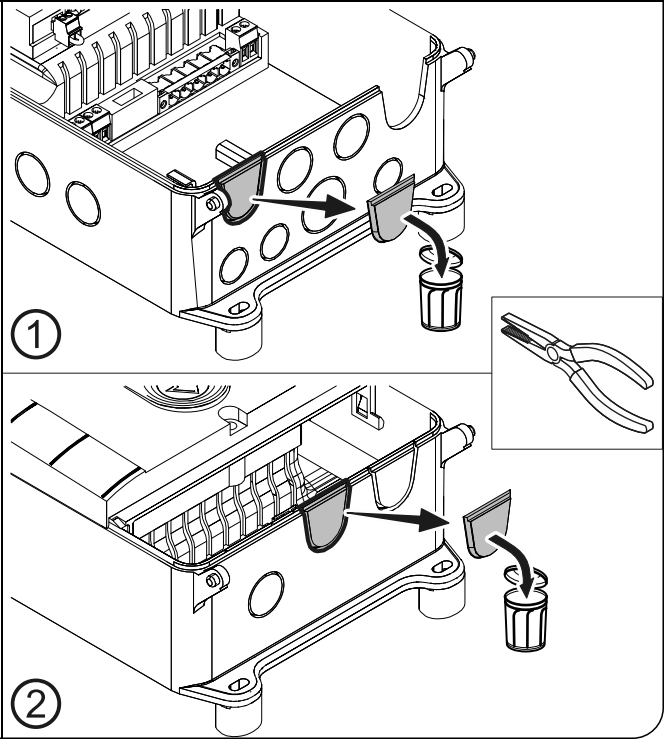

- Insert and connect connection cable in the open cable entry ① (from below) or ② (from above).
- Properly tighten cable glands.

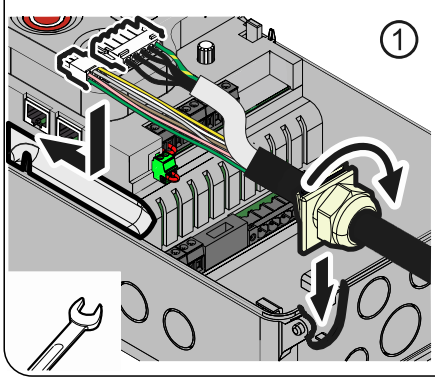

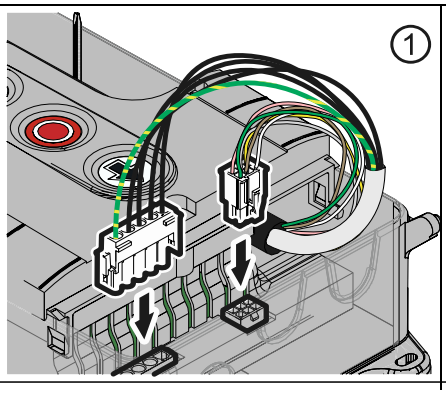

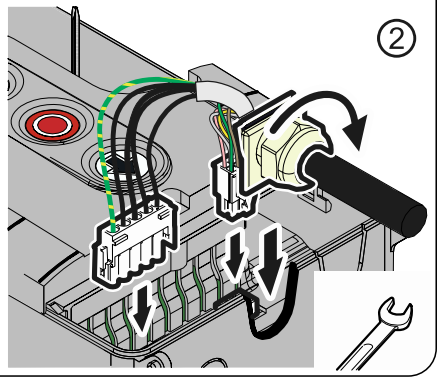

Avoid damage to parts!

- Open cable entry with suitable tool

Mains supply

3~, N, PE 230 / 400 V 50 / 60 Hz	3~, PE 230 / 400 V 50 / 60 Hz	1~, N, PE, sym. 230 V 50 / 60 Hz	1~, N, PE, asym. 230 V 50 / 60 Hz
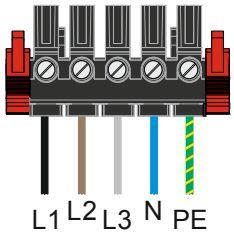	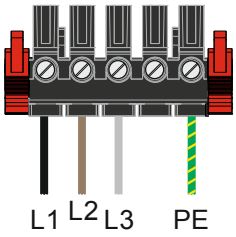	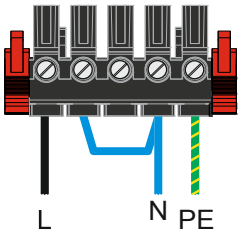 ≠ SI 25.15 WS, SI 45.7 WS	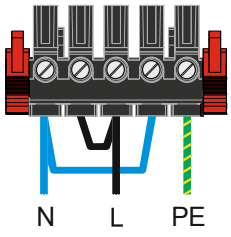 = SI 25.15 WS, SI 45.7 WS

3 x 400 V	1 x 230 V / 3 x 230 V
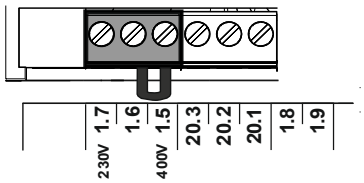	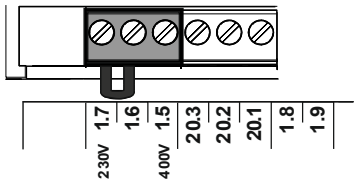

Mains connection to control

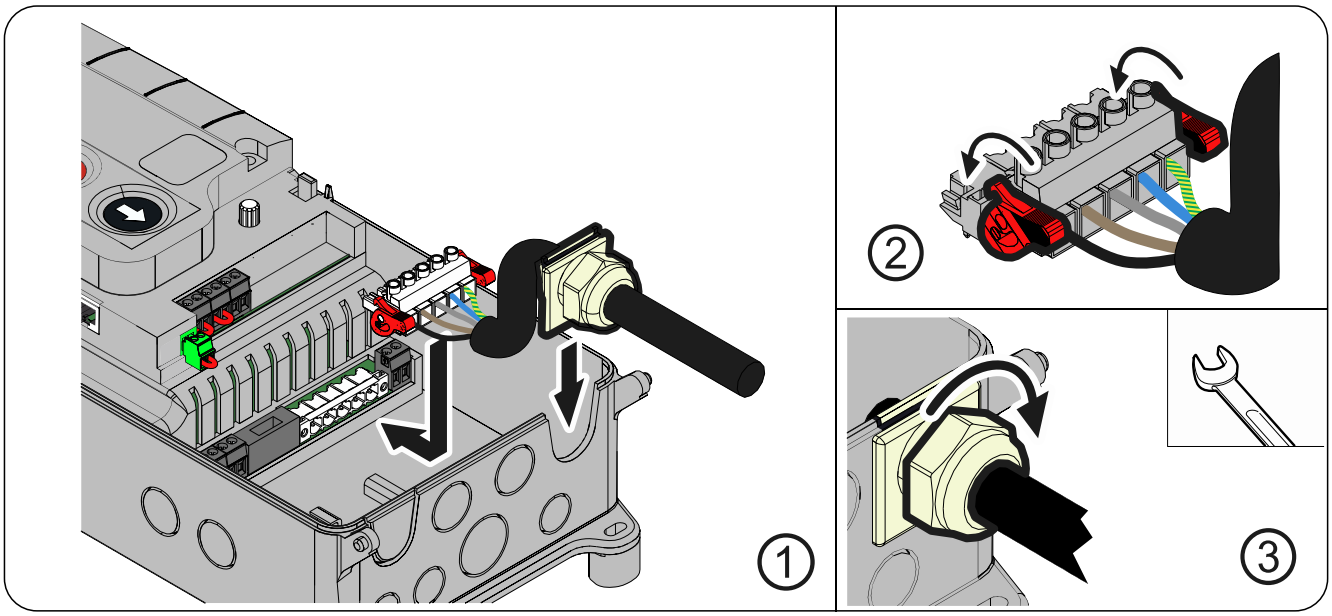

Completing the electrical installation

Install and tighten cable entries and/or cable glands.

For commissioning of the control, leave the covers open.

Overview of control

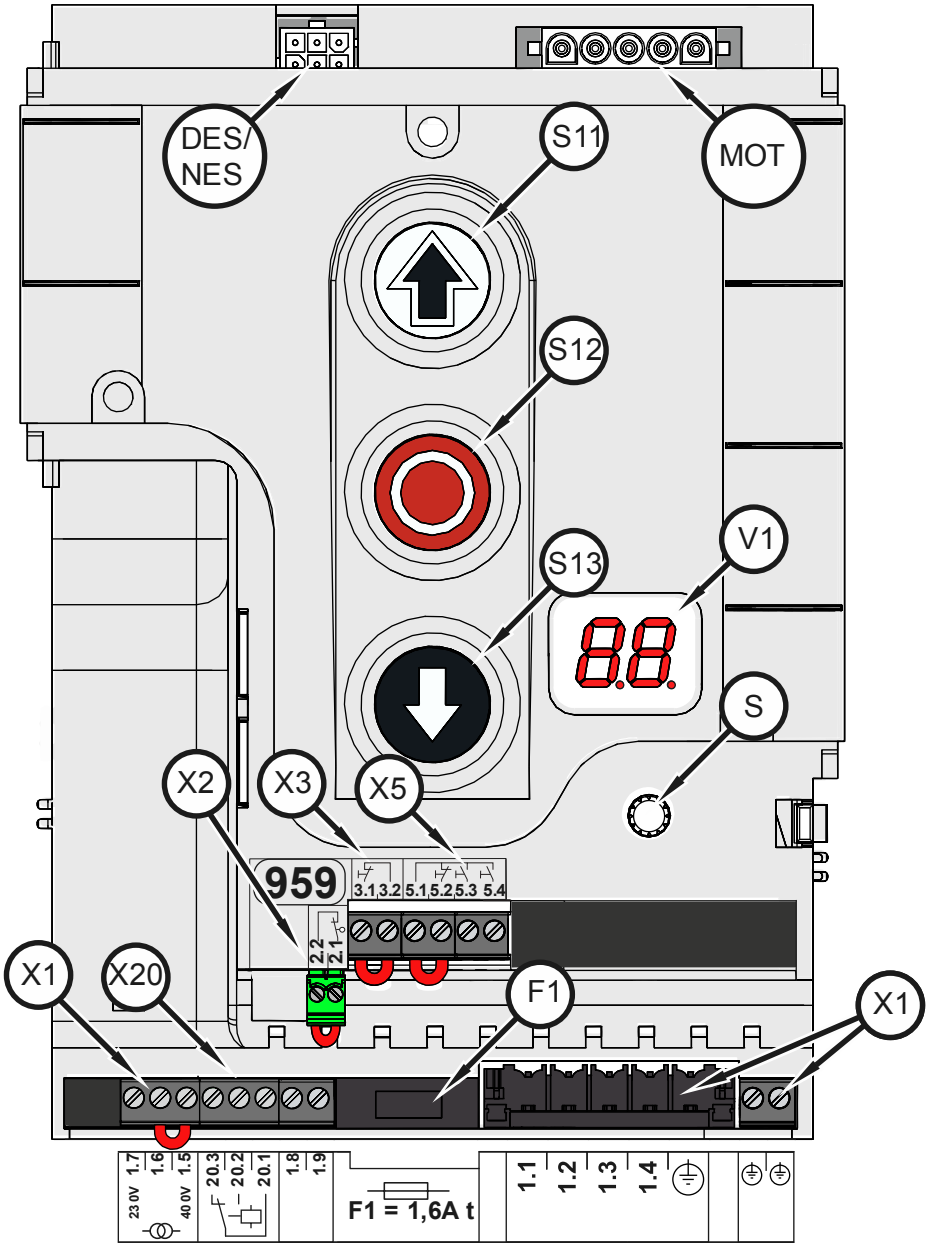

DES/ NES	DES or NES limit switch socket	**X1**	Mains supply
		X2	Door safety switch
F1	Micro-fuse 1.6 A time-lag	**X3**	Emergency STOP control device
MOT	Motor socket	**X5**	Control device, external three push-button
S	Selector switch	**X20**	Potential-free relay contact
S11	OPEN push-button		
S12	STOP push-button		
S13	CLOSE push-button		
V1	Display		

5 Commissioning of the control

▸ Supply cables Insert / switch on	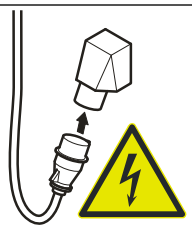	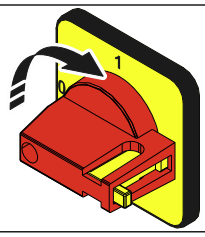

DES: Rapid adjustment of final limit positions

1. Check output rotating direction

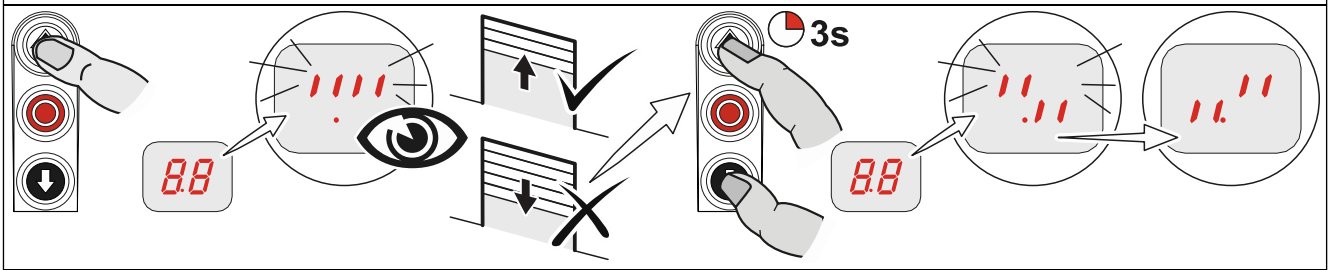

2. Move to OPEN final limit position

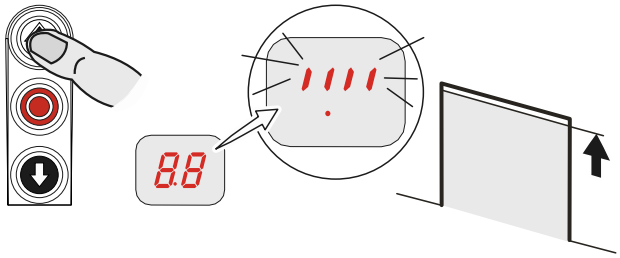

3. Save OPEN final limit position

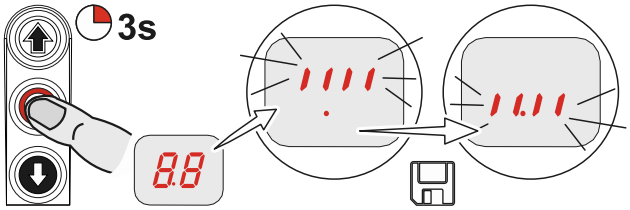

4. Move to CLOSE final limit position

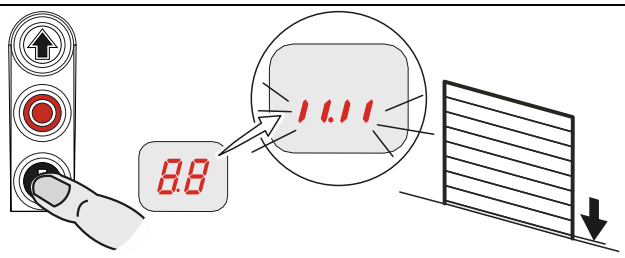

5. Save CLOSE final limit position

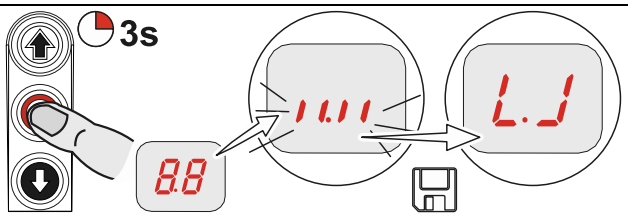

Note!

- The rapid adjustment is complete, "Hold-to-run" door operating mode is active
- Change of OPEN/CLOSE final limit positions via menu items "1.1" to "1.4"

Observe the installation instructions of the drive unit!

- For adjusting the mechanical limit switch, see the drive unit installation instructions

NES: Rapid adjustment of final limit positions

1. Check output rotating direction

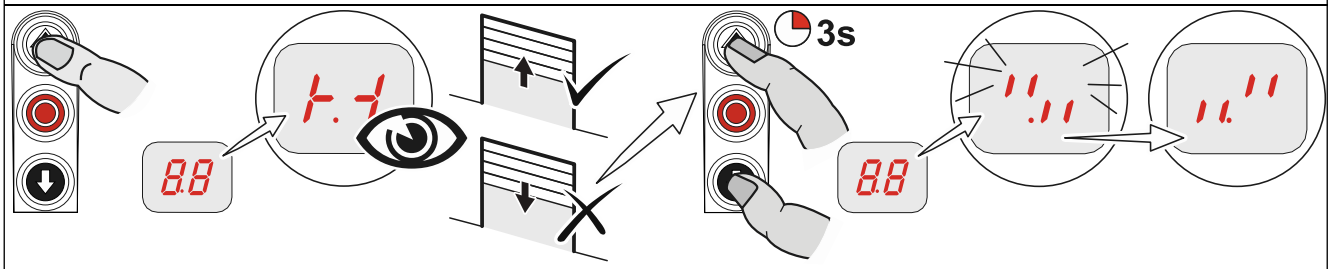

2. Move to OPEN final limit position and adjust S3 OPEN limit switch

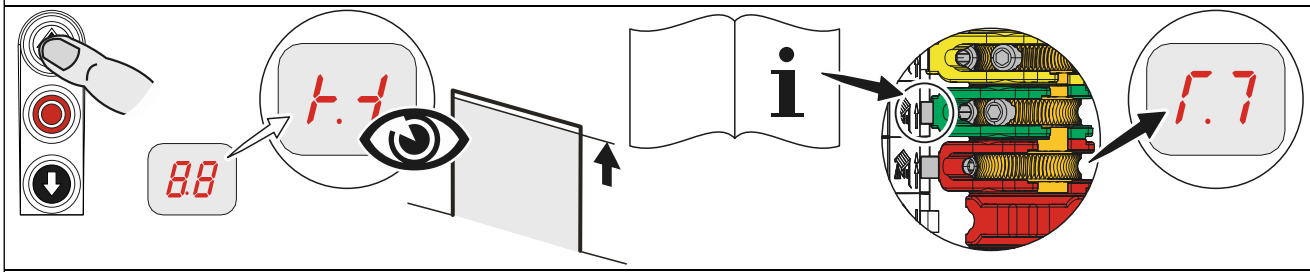

3. Move to CLOSE final limit position 5cm above the ground and adjust S5 pre-limit switch

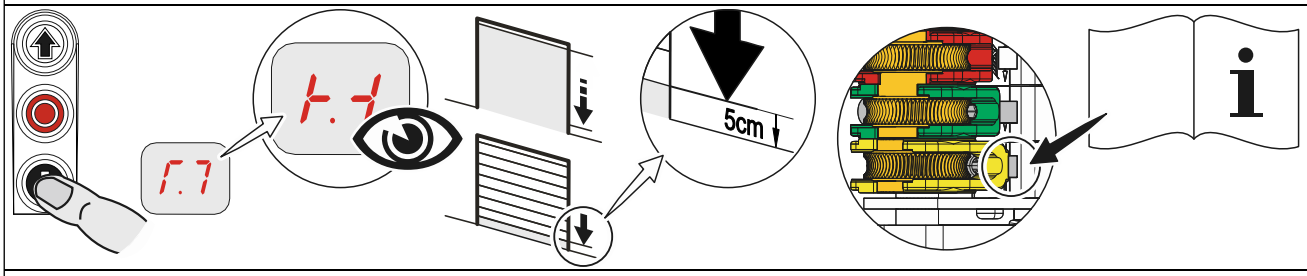

4. Move to CLOSE final limit position and adjust S4 CLOSE limit switch

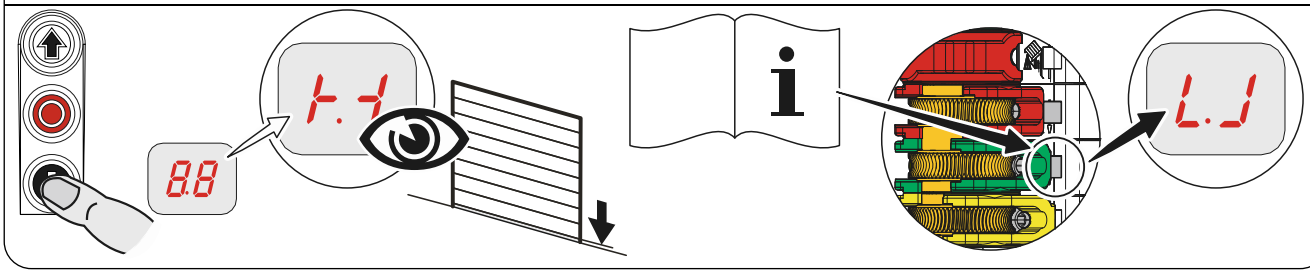

6 Advanced electrical installation

External supply X1

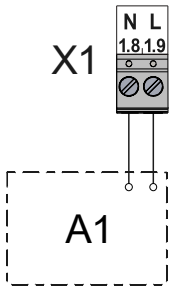

A1	External device

Emergency stop X3

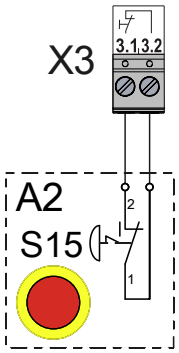

A2	Control device Emergency stop

Relay contact X20

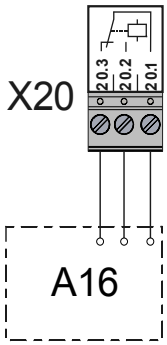

A16	Relay

External Control device X5

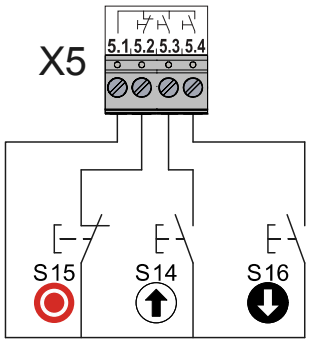

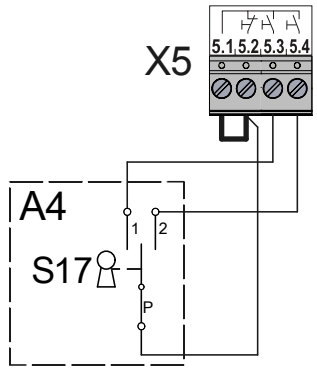

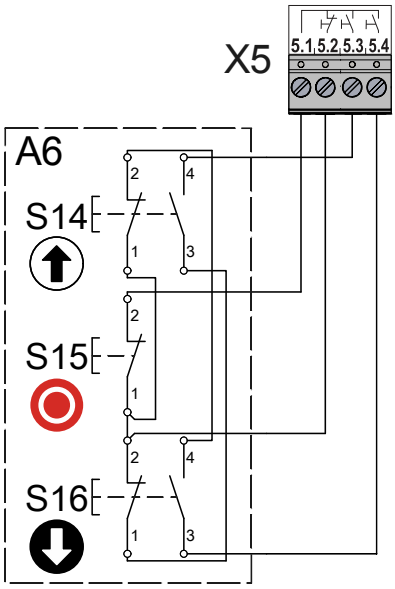

		A4	Key push-button
		A6	Three push button

Connection of spiral cable

Door safety switch

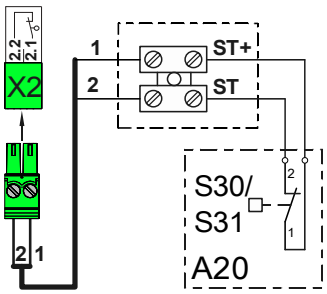

A20	Junction box switch
S30	Pass-door switch (NC contact)
S31	Slack-rope switch (NC contact)

7 Control programming

1. Start programming

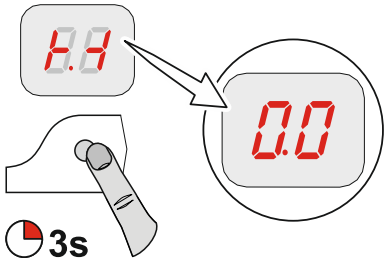

Note!

- Possible after rapid adjustment of final limit positions

2. Select menu item and confirm

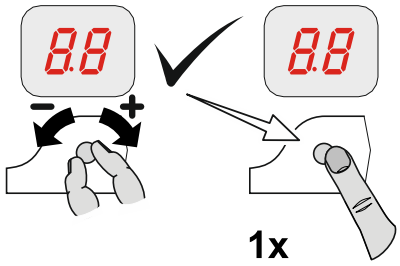

3.a) Set and store functions

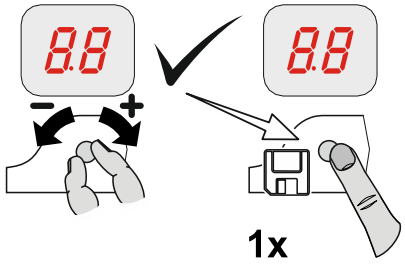

3.b) Set and store positions

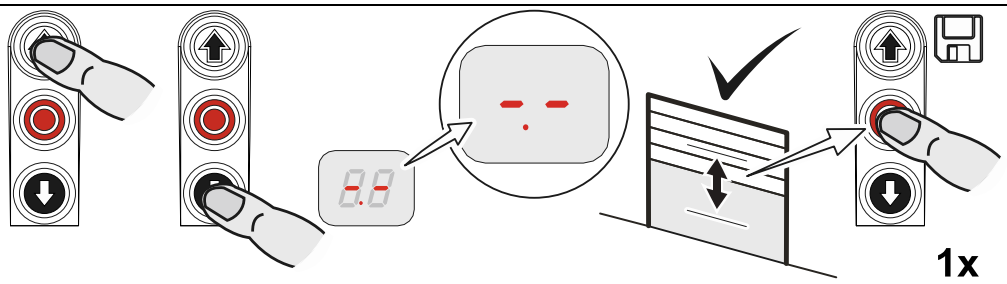

4. Exit programming

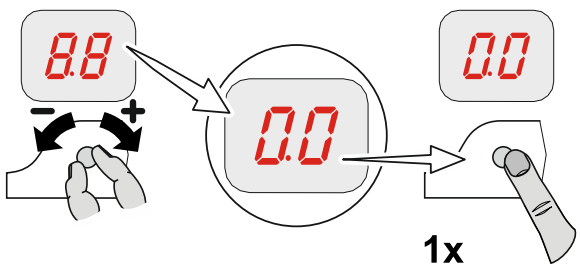

8 Table menu items

Door operating modes

0.1	1x	**Door operating mode**	
.1		OPEN Hold-to-run CLOSE Hold-to-run	1x
.2		OPEN Self-hold CLOSE Hold-to-run	
.5		Extended hold-to-run For NES: Set the S5 limit switch right before the CLOSE final limit position	
0.2	1x	**Output rotating direction**	
.0		Maintain output rotating direction	1x
.1		Change output rotating direction	3s

Door positions

1.1	1x	**OPEN final limit position, coarse correction (DES)**	
– –		Approach and store desired door position	1x
1.2	1x	**CLOSE final limit position, coarse correction (DES)**	
_ _		Approach and store desired door position	1x
1.3	1x	**OPEN final limit position, fine correction (DES)**	
-0	_9 … -9	Without door movement, [+] OPEN correction [–] CLOSE correction	1x
1.4	1x	**CLOSE final limit position, fine correction (DES)**	
-0	_9 … -9	Without door movement, [+] OPEN correction [–] CLOSE correction	1x
1.7	1x	**Setting for position of relay switching point (DES)** Select relay function via menu item 2.7	
– –		Approach and store desired door position; To use NES the switching point must be adjusted via the S6 auxiliary limit switch at the drive unit.	1x

Door functions

2.7	Relay function on X20	
.0	Off	
.1	Impuls contact* for 1 second	
.2	Permanent contact*	
.5	Red lamp, permanently lit during door movement OPEN final limit position 3 seconds permanent light CLOSE final limit position 3 seconds permanent light	
.6	Red lamp, permanently lit during door movement OPEN final limit position 3 seconds permanent light CLOSE final limit position Off	
1.3	Clearance dock leveller Active at OPEN final limit position only	

*) Previous teach-in of door positions via menu item 1.7 Relais X20 (only DES) or respectively via the S6 auxiliary limit switch at the drive unit (NES).

Safety functions

3.1	Force monitoring (DES)	.0	
.0	.2 1.10	0 = Off Adjustable for 2 % to 10 % overload	
3.3	Travel time monitoring (NES)	9.0	
0.0	9.0	0 = Off 0 to 90 seconds	

Maintenance cycle counter

8.5	1x	Maintenance cycle preselection						0.0	
		0.0		0.1		9.9	01-99 corresponds to 1,000 to 99,000 cycles Cycles are counted down	1x	
8.6	1x	Reaction upon reaching "zero"							
		.1	Status indication "CS" appears in turns with value set by menu item 8.5.					1x	
		.2	Changeover to "hold-to-run" door operating mode. Status indication "CS" appears in turns with value set by menu item 8.5.						
		.3	Changeover to "hold-to-run" door operating mode. Status indication "CS" appears in turns with value set by menu item 8.5. Option: Press STOP-button for 3 seconds to deactivate changeover and status indications for 500 cycles.						
		.4	Status indication "CS" appears in turns with value set by menu item 8.5 and relay contact X20 switches.						

Readout of Data memory

9.1 Cycle counter

1x

7-digit number

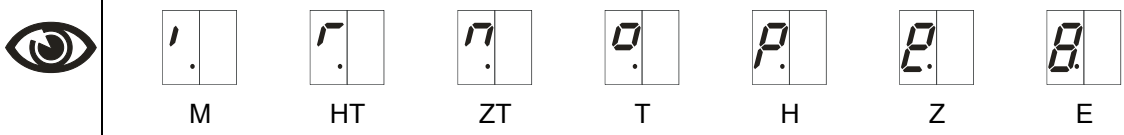

M HT ZT T H Z E

Displayed in division of ten consecutively

M = 1,000,000 **ZT** = 10,000 **H** = 100 **E** = 1
HT = 100,000 **T** = 1,000 **Z** = 10

9.2 Last faults

1x

Display change of the last 6 faults

9.3 Data counter

1x

7-digit number

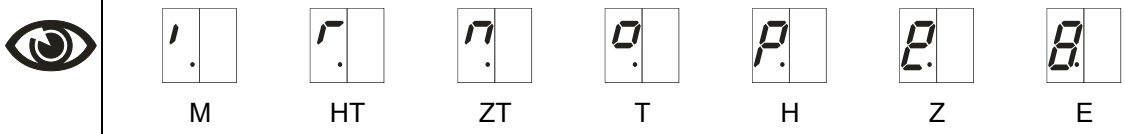

M HT ZT T H Z E

Displayed in division of ten consecutively

M = 1,000,000 **ZT** = 10,000 **H** = 100 **E** = 1
HT = 100,000 **T** = 1,000 **Z** = 10

.1	Cycle counter of the last change in programming	1x
.2	Number of activations of slack-rope, pass-door switch	

9.4 Software version

1x

The firmware version of the control is displayed.

Deleting / Readout

9.5 Deleting of all settings

1x

.0	Activating GfA stick	1x
.1	All settings are set to factory setting! Except for cycle counter	3s

9 Safety devices

X2: Input, door safety switch function

The door safety switch is installed on the door and connected to the door control via the spiral cable.

Function	Reaction upon activation
Slack-rope/pass-door	Switching contact is interrupted: Door stop
	Switching contact is closed: Door is ready for operation

Slack-rope/pass-door

If the pass-door switch is open circuit when an open or close command is given, fault “F1.2” is displayed. If activated during the door movement, the door is immediately stopped and fault “F1.2” is displayed.

Entrysense (electronic pass-door switch)

The pass-door switch, which has been tested to performance level c (plc) in accordance with EN 13849-1, is monitored by the door control. If the pass-door switch is open circuit when an open or close command is given, fault “F1.2” is displayed. If activated during the door movement, the door is immediately stopped and fault “F1.2” is displayed.

The magnetic contacts in the pass-door switch are switched by a permanent magnet. The door control assesses the switching status of the contacts independently of each other.
The “F1.7” fault indication appears if there is a fault.

X3: Input, emergency stop

Connection of an emergency stop control device as per EN 13850 or an evaluation unit for an anti-trap safety device. The “F1.4” fault indication appears upon activation.

10 Functional description

X1: Mains supply of the control and supply of external devices

Mains supply of the control

Connection via the terminals X1/1.1 to X1/1.4 and PE

Various mains connections: 3 N~, 3~, 1 N~ for symmetric and asymmetric motors.

Power supply 400 V = Wire link 1.5 – 1.6

Power supply 230 V = Wire link 1.6 – 1.7

Note!

- ▸ Pay attention to the "Mains supply connection" and "Mains supply connection to control" descriptions

Supply of external devices

Connection of external devices for 230 V, such as traffic-light, illumination, relay, etc. via the terminals X1/1.8 and X1/1.9.

Note!

- Supply of external devices 3 N~400 V or 1 N~230 V, symmetric
- Protection via F1, 1,6 A time-lag micro-fuse

X5: Input, control device

Warning!

- "Hold-to-run" door operating mode:
  The door must be fully visible from the operating point

Note!

- Application without STOP push-button: Connect wire link X5.1 to wire link X5.2

Door operating mode “Extended hold-to-run“

Menu item „0.1“ Function „.5“.

At the door operating mode "Extended hold-to-run", the CLOSE-button must be pressed until door final position CLOSED is reached. If the CLOSE button is released beforehand, the door will automatically move to OPEN-direction.

Note!

When using NES

- Door can´t be closed if S5 limit switch for door operating mode "Extended hold-to-run" is not set right before CLOSE

Potential-free X20 Relay contact

The relay functions are described under menu item "2.7".

Attention – Damage to components!

- Maximum current of 1 A at 230 VAC and 0,4 A at 24 VDC
- We recommend the use of LED lamps
- When using light bulbs, these should have power of maximum 40 W and be shock-proof

Force monitoring (DES only)

Menu item "3.1":
The force monitoring can only be used with fully balanced doors and drive units with DES. It should be able to detect when persons are moving with the door.

Warning!

- The force monitoring is no substitute for safety measures in providing protection against the trapping hazard

Function	Force monitoring
„.0“	• Off
„.2“ - „1.0“	• ".2": Low limit value • "1.0": High limit value

Important!

- Force monitoring for doors with spring balance only
- Environmental factors such as changes in temperature or wind load can lead to inadvertent triggering of force monitoring

After exiting programming, the door must carry out a full OPEN and CLOSE-operation in self-hold mode.
The force monitoring is a self-learning system which is effective for an opening width range of 5 cm to 2 m (approx.). Slow progressive changes, e.g. gradual reduction of the spring torsion, are compensated automatically.
After force monitoring has been triggered, only the "Hold-to-run" door operating mode is possible and the "F4.1" fault indication is displayed. The resetting occurs when a final limit position for the door is reached.

Travel time monitoring (NES only)

Menu item "3.3"
The set travel time is automatically compared with the time measured for movement between the final limit positions. If the travel time is exceeded, the "F5.6" fault indication appears.
Fault indication "F5.6" is reset by closing the door.

Note!

- The travel time is set at the factory to 90 seconds
- Recommended setting value: door travel time + 7 seconds

Maintenance cycle counter

Menu item "8.5":
A value between 0 and 99,000, as a multiple of 1000, can be selected for the maintenance cycle setting.
The maintenance cycle counter reading is reduced by one each time the Open final limit position is reached.
Once the maintenance cycle reaches zero, the setting from menu item “8.6” is activated.

Short-circuit/overload display

If there is a short circuit or an overload of the 24 VDC supply voltage, the 7-digit display vanishes.

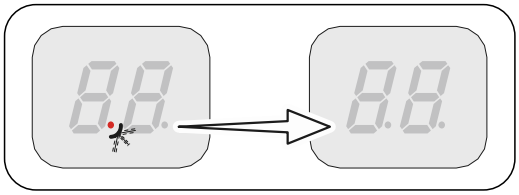

Standby function

If there is no fault or command pending, the control switches to "Standby".
If the automatic closing duration is longer than 60 seconds, the control also switches to "Standby".
Only the left dot is lit up.

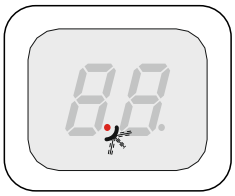

The "Standby" function is terminated with a command or by activation of the selector switch "S".

11 Status display

Faults		
	Display: "F" and code	
Code	Fault description	Fault causes and fault correction
	Terminals X2.1 – X2.2 are open. Slack-rope switch/Pass-door contact is open.	Check door safety switch. Check whether the connection cable is connected.
	Open safety circuit (DES) Emergency manual operation has been activated. Thermal protection of the motor has tripped.	Check emergency manual operation. Check door and door drive unit for stalling. Warning! Danger of the door dropping! Stalling may indicate the anti fall back device (if incorporated) has activated. Take appropriate measures.
	Terminals X3.1 – X3.2 are open. Emergency STOP has been activated.	Check emergency STOP. Check whether the connection cable is connected.
	Faulty entrysense switch. Faulty entrysense installation.	Open and close pass door. Check the DIP-switch in the junction box for spiral cable. Check the resistance and wiring of the spiral cable. Check the pass door installation.
	Line cross-circuit in the safety circuit.	Switch control off and on. Check the DIP-switch in the junction box for spiral cable. Check the resistance and wiring of the spiral cable.
	(DES) OPEN emergency stop switch reached.	In the voltage-free state, move the door back via the emergency manual operation.
	(NES) OPEN or CLOSE emergency stop switch reached. Emergency manual operation has been activated. Thermal protection of the motor has tripped Limit switch system has changed over from NES to DES without the control being reset.	Check OPEN/CLOSE emergency stop switch. Check emergency manual operation. Reset of control via menu item "9.5". Check door and door drive unit for stalling. Warning! Danger of the door dropping! Stalling may indicate the anti fall back device (if incorporated) has activated. Take appropriate measures.
	(DES) CLOSE emergency stop switch reached.	In the voltage-free state, move the door back via the emergency manual operation.
	No limit switch detected (active at initial operation).	Connect the limit switch to the control. Check the limit-switch connection cable.

Faults

	Display: "F" and code	
Code	**Fault description**	**Fault causes and fault correction**
	Limit switch system has changed over from DES to NES without the control being reset.	Reset of control via menu item "9.5".
	Internal plausibility error.	Execute fault clearance trough movement command.
	Triggering of force monitoring.	Check the door mechanism for stiffness.
	ROM error.	Switch control off and on. Replace control if necessary.
	CPU error.	Switch control off and on. Replace control if necessary.
	RAM error.	Switch control off and on. Replace control if necessary.
	Internal fault of control.	Switch control off and on. Replace control if necessary.
	Fault of digital limit switch (DES).	Check DES connector and connection cable. Switch control off and on.
	Fault with door movement.	Check the limit switch turn. Switch control off and on. Check door and door drive unit for stalling. Warning! Danger of the door dropping! Stalling may indicate the anti fall back device (if incorporated) has activated. Take appropriate measures.
	Fault with rotating direction (DES).	Change rotating direction via menu item “0.2”.
	At initial operation minimum travel distance was not completed.	Move the door for at least 1 second.

Commands	
	Display: "E" and code
Code	**Command description**
	An OPEN-command is present. Inputs X5.3
	A STOP command is present. Inputs X5.2
	A CLOSE command is present. Inputs X5.4

Status indications

Status display	Description
	Preset value for maintenance cycle counter reached.
	Dot on left is not lit: Control circuit has a short circuit or is overloaded.
	Function for changing the rotating direction is activated, only possible during initial operation.
	Change of rotating direction has been carried out, only possible during initial operation.
Flashing	Teach in OPEN final limit position.
Flashing	Teach in CLOSE final limit position.
Flashing	UPWARDS travel active.
Flashing	CLOSING operation active.
	Stop between the set final limit positions.
	Stop at the OPEN final limit position.
	Stop at the CLOSE final limit position.

12 Explanation of symbols

Symbol	Explanation
	Prompt: Read installation instructions
	Prompt: Check
	Prompt: Note
	Prompt: Note the setting of the menu below
	Factory setting of the menu
	Factory setting of the menu, value on the right
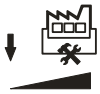	Factory setting of the minimum limit, dependent on drive unit
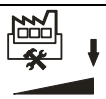	Factory setting of the maximum limit, dependent on drive unit
	Setting range
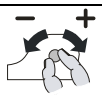	Prompt: Select menu item or value, turn selector switch to the left or to the right
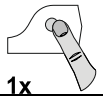 1x	Prompt: View menu item, press selector switch once
1x	Prompt: Store, press selector switch once

Symbol	Explanation
	Prompt: Setting via OPEN/CLOSE built in push-button; Use OPEN push-button to increase value, CLOSE push-button to decrease value
 1x	Prompt: Press stop button once via built in push-button
 1x	Prompt: Save, press stop button once via built in push-button
 3s	Prompt: Save, press stop button for three seconds via built in push-button
 3s	Prompt: Reset the control, press stop button for three seconds via built in push-button
	Prompt: Move to door position
	Prompt: Move to door position for OPEN final limit position
	Prompt: Move to pre-limit
	Prompt: Move to door position for CLOSE final limit position

Declaration of Incorporation

pursuant to Machinery Directive 2006/42/EC for a partly completed machine Appendix II Part B

Declaration of Conformity

pursuant to EMC Directive 2014/30/EU

GfA ELEKTROMATEN GmbH & Co. KG
Wiesenstraße 81 · 40549 Düsseldorf
Germany

We,

GfA ELEKTROMATEN GmbH & Co. KG

hereby declare that the product specified in the following complies with the above-mentioned EC Directive and is only intended for installation in a door.

TS 959

Applied standards

DIN EN 12453:2014-06	Doors – Safety in use of power operated doors
DIN EN 12978:2009-10	Safety devices for power operated gates and doors
DIN EN 60335-1:2012-10	Household and similar electrical appliances - Safety - Part 1: General requirements
DIN EN 61000-6-2:2016-05	Electromagnetic compatibility (EMC) – Part 6-2 Generic standards – Immunity standard for industrial environments
DIN EN 61000-6-3:2011-09	Electromagnetic compatibility (EMC) – Part 6-3 Generic standards – Emission standard for residential, commercial and light-industrial environments

On reasoned request, we undertake to submit the special documents for this partly completed machine to the supervisory authorities.

Authorised representative for the compilation of the technical documentation

(EU address in the company)
Dipl.-Ing. Bernd Synowsky
Documentation representative

Partly completed machinery according to EC Directive 2006/42/EC is only intended to be installed in, or combined with, other machinery (or other partly completed machinery/systems) to form a completed machine pursuant to the Directive. Therefore, this product may be put into operation only when it has been determined that the complete machine/equipment in which it has been installed complies with the provisions of the above-mentioned directives.

Düsseldorf, 02.03.2017

Stephan Kleine
Managing Director

Signature