USER MANUAL
ENTRAPMENT PROTECTION RAY-S 1100

Intended Usage

The RAYTECTOR is an infrared safety light barrier using a single light beam. It is intended solely for the entrapment protection of automatically driven gates. RAYTECTOR consists of a light transmitter and a light receiver. The obstruction of the light beam causes a dynamic safety signal to fail. This is detected by the control unit which interrupts the enable circuit. The potentially hazardous movement of a gate or machine is halted. A two colored LED displays the functional status.

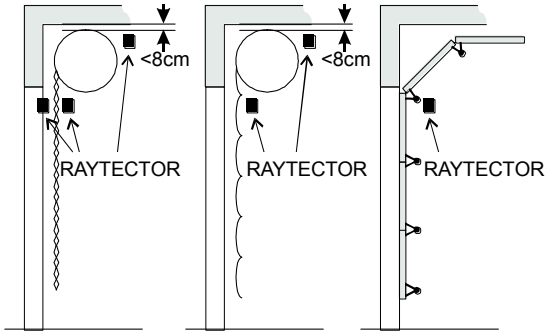

Roller Grid Roller Shutter Sectional gate

Safety regulations

Danger of personal injury and property damage! The unit should be installed and operated by persons, who are familiar with these instructions and the current regulations for safety at work and accident prevention. Follow local regulations especially as regards preventative measures. Safety level of machine and safety equipment depends on reliability of the used interface.

Replacement and use of components, which are not certified by the producer may cause safety risk. Any guarantee is void following opening of the housing or unauthorized modifications.

General technical data

Operating range	1,5 m to 10 m
min. size of obstacle	50 mm
Output	FRABA OSE
Supply voltage *)	10 V to 28 V (DC)
Supply current	max. 60 mA
Protection class	IP54
Operating temperature	-20 °C to +55 °C
Housing material	ABS black

*) for connection to VITECTOR control units or door operators with integrated FRABA OSE interface only (refer to manual of door operator)

Safety properties

The given values are valid in combination with control unit OSE-C 2323 or OSE-C 2324 only.

ESPE type	2 (IEC 61496-1)
Safety category	3 (EN 13849-1)
Performance Level	c (EN 13849-1)
Maximum usage duration	20 years
MTTFd	41 years
PFHd	$1{,}8 \times 10^{-7}$ per hour
DCav	89 %
Reaction time	max. 32 ms

USER MANUAL
ENTRAPMENT PROTECTION RAY-S 1100

Mounting of the safety light barrier

To allow the sensor units to be aligned properly, we recommend utilizing the mounting brackets type RAY-A 0010.

The lens of the light barrier sensors is to be protected against all kinds of environmental influences such as rain, dust or mechanical damaging, since this will affect the optical qualities.

If mounted in open air, a rain cover has to be fitted on site.

To prevent interferences between two light barrier systems mounted inside and outside an opening, ensure the direction of the light beam is altered on the opposite side.

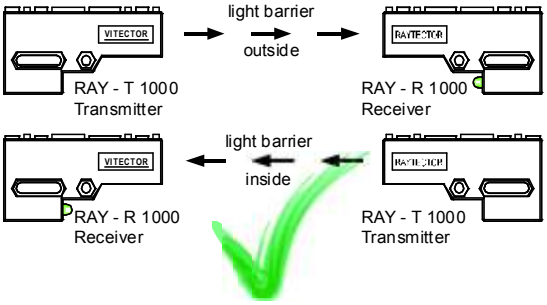

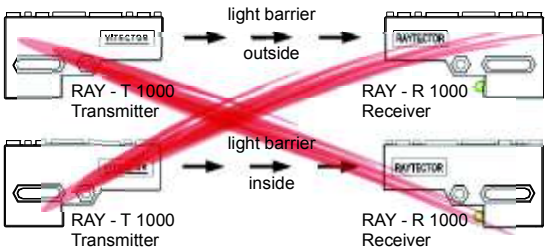

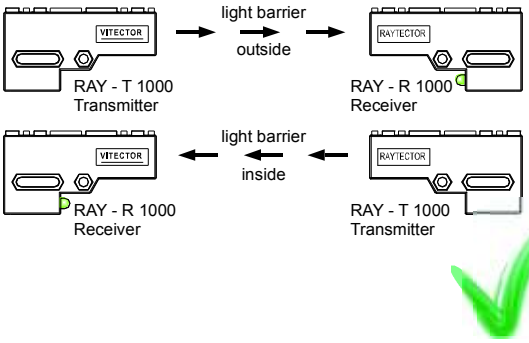

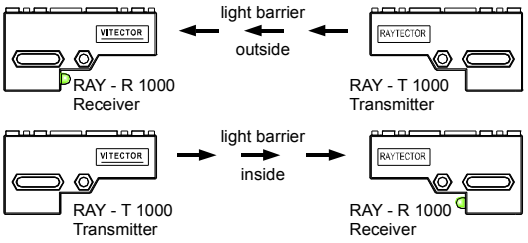

In case you are using RAYTECTOR light barriers on two doors right next to each other, please also alter the direction of the light beam accordingly to prevent interferences.

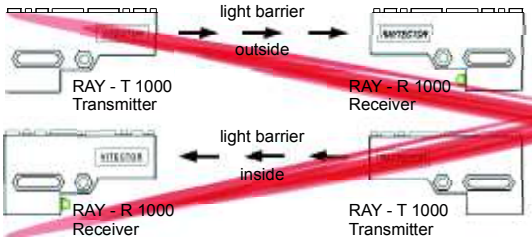

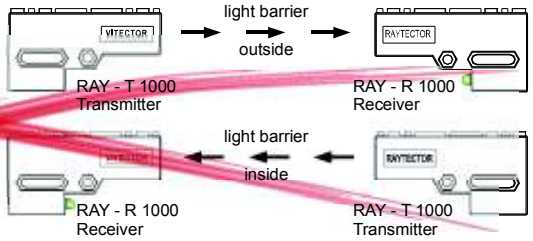

Distance to risk-areas

The light barriers have to be mounted in an adequate distance to risk-areas to make sure that the movement of the gate will be stopped before the risk-area will be reached. A distance of about 150 mm to the shearing-off area is normally adequate,

USER MANUAL
ENTRAPMENT PROTECTION RAY-S 1100

but can be adjusted corresponding to the velocity of fast running gates.

Be aware that a light barrier which is mounted too low, allows persons to reach above the light beam into the hazardous area!

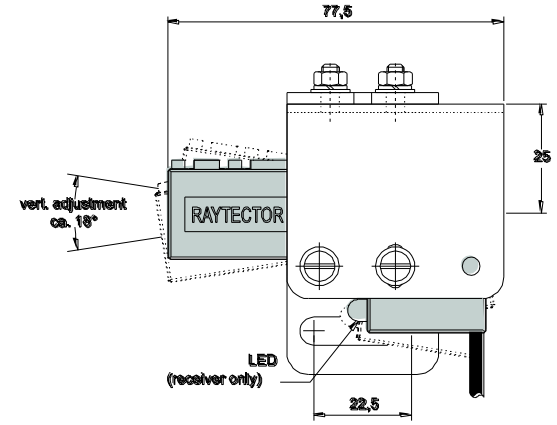

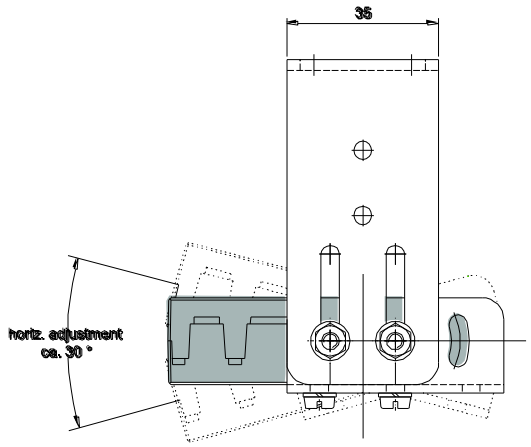

Mounting brackets

The installation of the RAYTECTOR light barrier works best with the available bi-part mounting angles. Tighten the screws only lightly after the installation to allow a fine adjustment of the light beam after the power is connected. After the unit was aligned all bolts should be tightened fast.

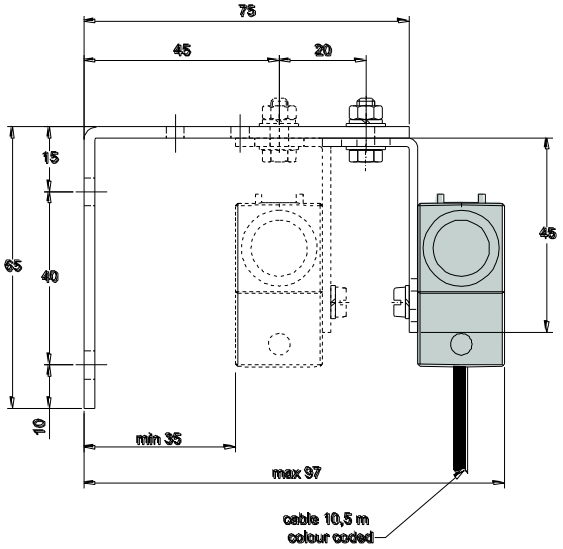

Mounting behind the door

The mounting of RAYTECTOR has to be done with the bipartite mounting angle set which is available as an option. At the mounting inside of a rolling grille, the mounting angles have to be joined with the RAYTECTOR as shown in the drawing and fixed behind the side guides. The shape of the angle allows bringing the RAYTECTOR as tight as possible to the moving curtain.

USER MANUAL
ENTRAPMENT PROTECTION RAY-S 1100

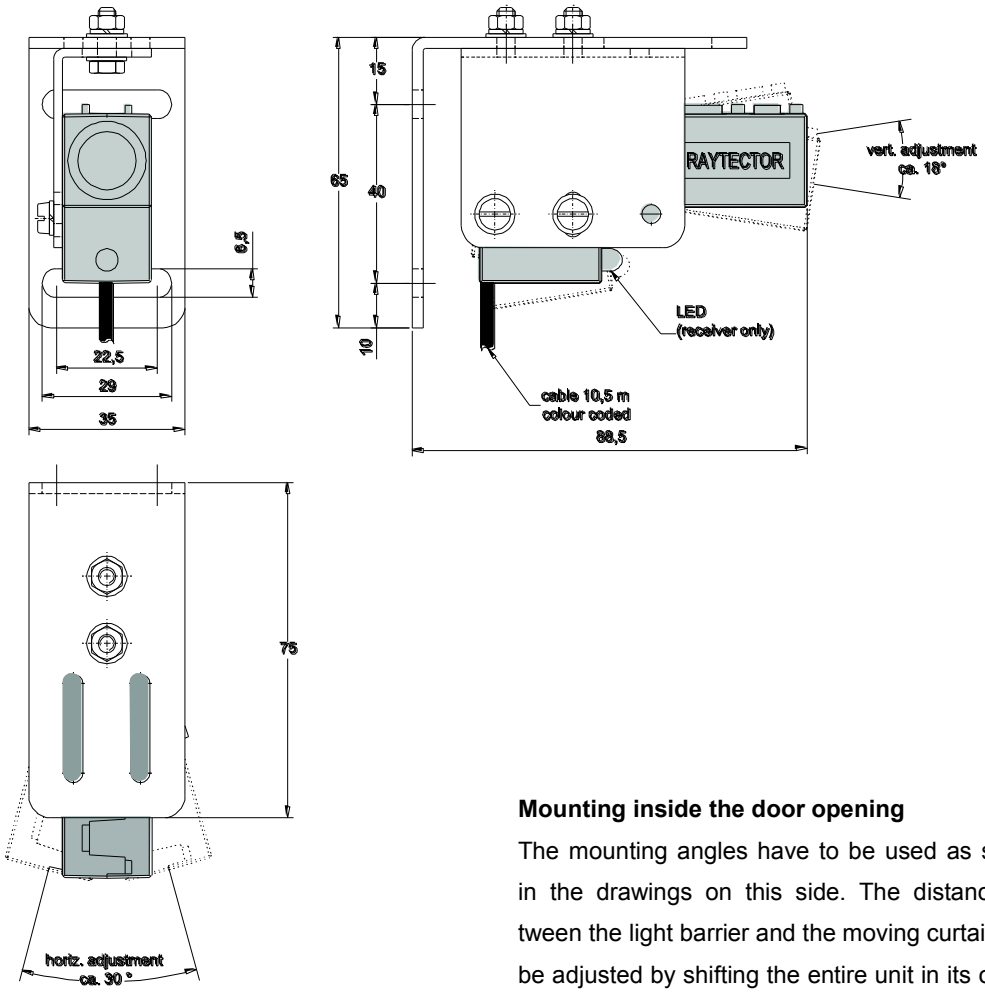

Mounting inside the door opening

The mounting angles have to be used as shown in the drawings on this side. The distance between the light barrier and the moving curtain may be adjusted by shifting the entire unit in its oblong mounting holes towards the door.

Initial test and light beam alignment

For the proper alignment of the light beam on large doors a pen shaped laser pointer may be helpful.

Place the laser pointer on the top of the light barriers housing and target the laser spot onto the opposite unit.

Repeat the procedure with the other sensor. Due to inherent misalignment of the laser pointer towards its housing a latte fine adjustment of the light barrier is inevitable.

The integrated bicolor LED of the RAYTECTOR receiver unit lights up red when power is on, but the light beam is interrupted; it changes to green as soon as the light beam is unrestricted.

USER MANUAL
ENTRAPMENT PROTECTION RAY-S 1100

Check for dangerous reflections

The angle of reflected beam emitted out of the RAYTECTOR is less than ± 5° on a 3 m distance. This implies, that a reflective surface within this light cone could possibly reflect the light beam indirectly into the receiver, disobeying any obstacle which should have been detected.

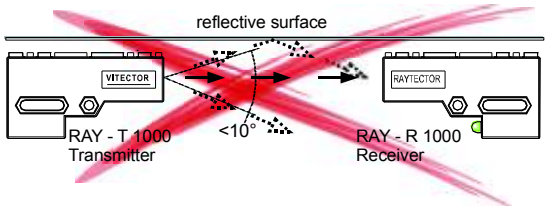

This is particularly possible, if the surface of the lintel is reflective, such as a painted barrel hood.

Since the light barrier has to be mounted there anyway, the following simple test routine has to be carried out

- after the initial installation
- whenever the unit is readjusted
- during the annual maintenance of the door

Follow the ideal line between the emitter (yellow label) and the receiver (grey label, LED) while frequently interrupting the invisible light beam with two finger / the handle of a screwdriver or a similar obstacle of approx 12 to 15 mm width.

If the obstacle is not identified at any position check if a reflection is possible and either correct the alignment of the light barrier as shown on the following graphic or clad the reflective surface with some dampening material.

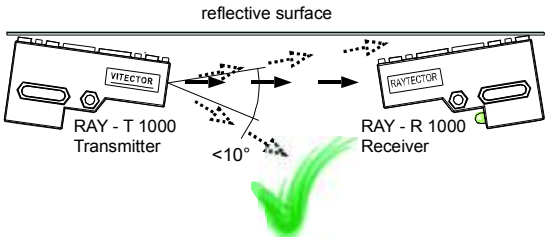

Carry out the same test afterwards.

Check for adequate positioning

To check the perpendicular distance between the light beam and the door curtain, move a cylindrical rod of 15 mm diameter and 150 mm length, held perpendicular to the door curtain, together with the power operated door towards the lintel. The Safety device is supposed to detect the obstacle and stop the door before the rod touches the lintel beam. Do not stick the test rod into the mesh of the rolling grille!

To check the vertical distance between the light beam and the door curtain, move a 50 mm thick obstacle with the door towards the lintel.

If this obstacle is not detected, move the light barrier towards the curtain and try again.

Service and maintenance

The lintel safety light barrier RAYTECTOR needs no regular maintenance. In the process of the required annual inspection of the door the light barrier shall be cleaned with a soft dry cloth, as dirt on the lenses may cause the light beam to diverge. Do not use petroleum or solvent-based cleaning fluids as they may cause harm to the polyacrylic lens. If necessary some household-glass-cleaning alcohol may be used instead.